Review of active noise control techniques with emphasis on sound quality enhancement

Jiguang Jiang[a,b*], Yun Li[c]

[a] School of Mechanical and Electrical Engineering, Changchun University of Science and Technology, Changchun 130022, China

[b] Experimental Education Center of Mechanical Engineering, Changchun University of Science and Technology, Changchun 130022, China

[c] School of Engineering, University of Glasgow, Glasgow G12 8LT, UK

* Corresponding author email: jiangjiguang@cust.edu.cn

ABSTRACT:

The traditional active noise control design aims to attenuate the energy of residual noise, which is indiscriminative in the frequency domain. However, it is necessary to retain residual noise with a specified spectrum to satisfy the requirements of human perception in some applications. In this paper, the evolution of active noise control and sound quality are briefly discussed. This paper emphasizes on the advancement of active noise control method in the past decades in terms of enhancing the sound quality.

KEY WORDS:

Sound quality;

Active noise control;

Filtered-x least mean squares;

Adaptive noise equalizer;

Artificial neural networks;

Frequency selective least mean squares.

1. Introduction

Industrial noise, which becomes increasingly evident with the increased number of industrial equipment, affects the health of the human hearing, digestive system, nervous system, endocrine system, etc. [1, 2] People have understood the harmful of noise pollution, and countries worldwide have formulated strict norms for industrial noise control. In these norms, the sound power and A-weighted noise levels are usually used to measure the noise, but they are not adequate to characterize the perception of a listener [3]. The underlying concept of sound quality (SQ) is the accurate interference of human perception and was proposed by Blauert in 1994[4].

The character of sound that relates to acceptance is called sound quality, which has played a large role in determining satisfaction [5]. With the development of noise control technologies, sound quality research, which focuses on how people cognize, assess and improve noise, has gained attention, particularly in the fields of automobile, transportation and electric appliance industries worldwide [6].

1) Automobile: Noise studies originated from the automobile industry in Europe and America in the mid-1980s. The main theoretical and experimental works on the human perception of sound quality were conducted by companies of AVL LIST [7], Honda [8], Delphi [9], Ford [10], GM [11], etc. Many automobile companies optimized the design of their products based on those research data [12-14].

2) Transportation: Researchers also discussed the effects of the sound quality in aircraft [15], cabin [16], train [17] and maglev trains [18].

3) Electric appliances: The studies focused on air-conditioner, refrigerator,

washing machine and mobile phone [19-21].

4) Other SQ studies: Involving experiments and applications are introduced in [22-25].

Noise control can be classified into two types of methods: passive and active. The passive noise control (PNC) method mainly reduces the noise by vibration absorption, sound absorption and sound insulation with damping materials by using the interaction between sound and materials, and the sound energy can be transformed into other forms of energy to reduce noise [26].

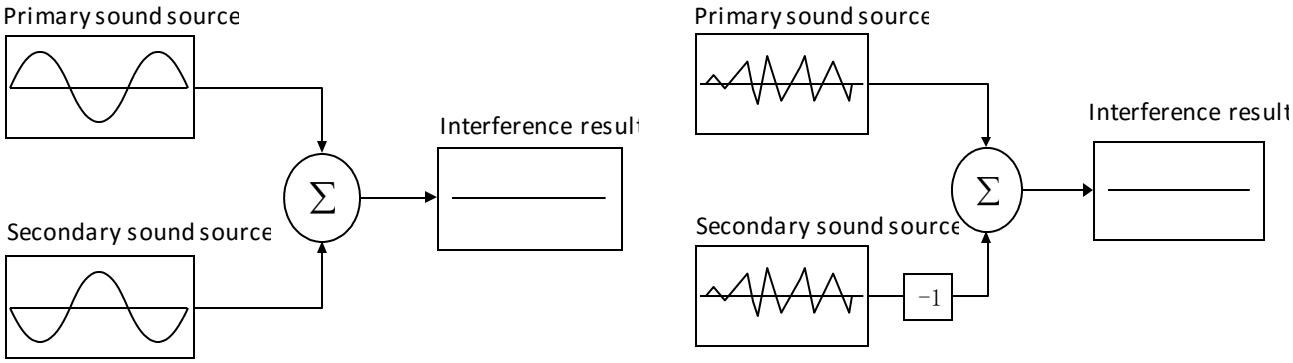

Fig. 1. Schematic diagram of Yaung's interference principle of sound wave control for (a) sinusoidal wave and (b) complex wave

The active noise control (ANC) method artificially adds a secondary source in the noise control process using Yaung's interference principle of sound wave to control the original noise as shown in Fig. 1. Compared with passive control, the active control methods have obvious benefits. First, the control system parameters can be targeted to design or change based on different characteristics of the noise. Second, the active control method has better control effect on low-frequency noise and effectively remedies the problem of low-frequency noise reduction effect [27]. Finally, the active noise controller has the advantages of flexibility, low cost, and convenient

installation; more importantly, it does not negatively affect the machine's structure and performance. The rapid development of large-scale integrated circuits and advancement of active control technologies have facilitated many successful implementations of ANC [28].

The active control method was proposed by Lueg in 1936 and applied for the process patent of acoustic-oscillation elimination in the United States [29]; this patent is considered the starting point of the development of active noise control technology. In 1953, the first active noise control device, which was called "electronic sound absorber", was designed in the United States of America. This system consisted of a loudspeaker, an amplifier, and a microphone, and its target was to reduce the sound pressure level near the microphone [30].

In the late 1950s, the acoustic field analysis technology was not mature, and the development of electronic technology was relatively slow. The active control technology was in a relatively quiet stage for a relatively long period of time until the 1980s. With the rapid development of digital signal processing and large-scale integrated circuit technology, the practical active noise control technology began to rapidly develop [31]. Scientists in the United Kingdom first introduced the method of active noise control in automobiles and aircraft cabins [32]. The least-mean-square (LMS) algorithm of channel filtering was used to study interior noise in Japan, and the active noise control model was established [33]. In the United States of America, the detailed study and experiment of noise caused by engine vibration and road surface excitation were conducted by Jerome Couche, and the noise reduction of 6.5 dB was

achieved in the range of 40-500 Hz [34]. Several prominent works on the development of ANC technology have been reported in the last three decades, such as the filtered-x least-mean-square (FxLMS) algorithm [35], genetic algorithm (GA) [36], functional link artificial neural network (FLANN) [37], simplified hyper-stable adaptive recursive filter (SHARF) algorithm [38] and frequency selective least-mean-square (FSLMS) algorithm [39].

In recent years, many research groups attempted to improve the noise sound quality using adaptive active noise control (AANC) methods. In Müller-BBM company, the experiment was performed on an AANC system, which was installed on a vehicle. The engineers found that the sound pressure level and loudness value (an objective parameter of SQ) of the interior noise significantly decreased [40]. Spanish researchers conducted the engine noise active control in the lab, analyzed the psychoacoustic parameters, evaluated subjective evaluation results, and found that the reduction in sound pressure level did not necessarily reduce the annoyance of passengers to the engine noise, which was also related to the spectral characteristics of the noise [41, 42]. More theoretical studies on ANC systems to improve the sound quality were reported in [43–45].

ANC and sound quality studies have made significant progress in the last 30 years, and several relevant review papers have been published [46–50]. Unlike the published reports, this paper aims to survey the development of ANC technology with an emphasis on SQ enhancement. The paper is organized as follows. A brief review of the concept of SQ and its evaluation methodology, which includes the subjective

evaluation and objective evaluation, are discussed in Section 2. ANC methods in the field of SQ enhancement are studied in detail in Section 3. ANC schemes based on the selective attenuation method are briefly presented in Section 4. The conclusions are drawn in Section 5.

2. Sound quality evaluation

The concept of sound quality indicates that the noise control is not simply to reduce the pressure level of sound, but more importantly, the products can be adjusted according to the subjective feeling of the consumers. The most popular approaches to determine the sound quality of a product can be broadly classified into two domains: subjective and objective evaluations [51, 52]. The former emphasizes that sound can be subjective and sensitive for a person; the latter expresses the sound in terms of an objective numerical value such as the physical acoustics and psychological acoustics [53]. In addition to the frequency and intensity, other psychoacoustics factors should be considered.

2.1 Objective evaluation

Psychoacoustic parameters are used to describe different noises caused by the different subjective feelings about objective physical quantities. In the objective test, there are four international general main parameters: loudness, sharpness, roughness and fluctuation strength [54, 55].

The loudness describes the degree of psychological perception of sound in the hearing. The main methods to calculate the complex noise loudness were independently developed by Stevens and Zwicker [56, 57]. The former is suitable for

the diffusing sound field, whereas the latter fits the diffusion and free sound field conditions. The sharpness represents the auditory perception related to the spectral correlation of the sound, the calculation model was introduced by Bismarck and Aures [58, 59]. The roughness reflects the auditory perception characteristic related to the frequency modulation, amplitude modulation and sound level for the sound with a frequency of 20-200 Hz [60]. The calculation model of roughness was introduced by Aures [61].The fluctuation strength is suitable for the evaluation of sound signal for low-frequency modulation below 20 Hz; it reflects the relief intensity of loudness for the subjective feeling of ears. The calculation model of fluctuation strength was proposed by Fastl and Zwicker [62].

2.2Subjective evaluation

The subjective perception test is an essential procedure to obtain the sound quality character of sound events and develop parametrical models that describe the sound quality quantities [63]. Two methods are commonly used [55, 64]. The Semantic Differential (SD) method which was created by Osgood in 1957 [65], offers a quick mean to measure people's attitude and the emotional connotation of concepts. A series of semantic differential indices was studied, which include safe-unsafe, like-dislike, quiet- boisterous, friendly-unfriendly, close-far and happy-sad [66-68]. This method has been applied to various problems in marketing, personality measurement, clinical psychology, cross-cultural communications, and the hearing perception of sound signals. The Paired Comparison (PC) method which was created by David [69], offers an easy way to present people's attitude with a sequence of pairs

of sounds A and B. For each pair, people must decide which sound is preferred.

2.3 Relationship between objective and subjective evaluations

The relationship between objective and subjective evaluations is drawn in Fig. 2. To find their relationship, it is useful to calculate the correlation factors and perform a regression analysis [70].The Sound Quality index (SQI) can be expressed as a linear combination of psychoacoustic parameters by

$$\mathrm{SQI} = \mathrm{a} + b_1 \cdot Ld + b_2 \cdot Sp + b_3 \cdot Rg + b_4 \cdot Fs \tag{1}$$

where *Ld* is the loudness, *Sp* is the sharpness, *Rs* is the roughness, *Fs* is the fluctuation strength, and a, b_1, b_2, b_3, and b_4 are undetermined coefficients.

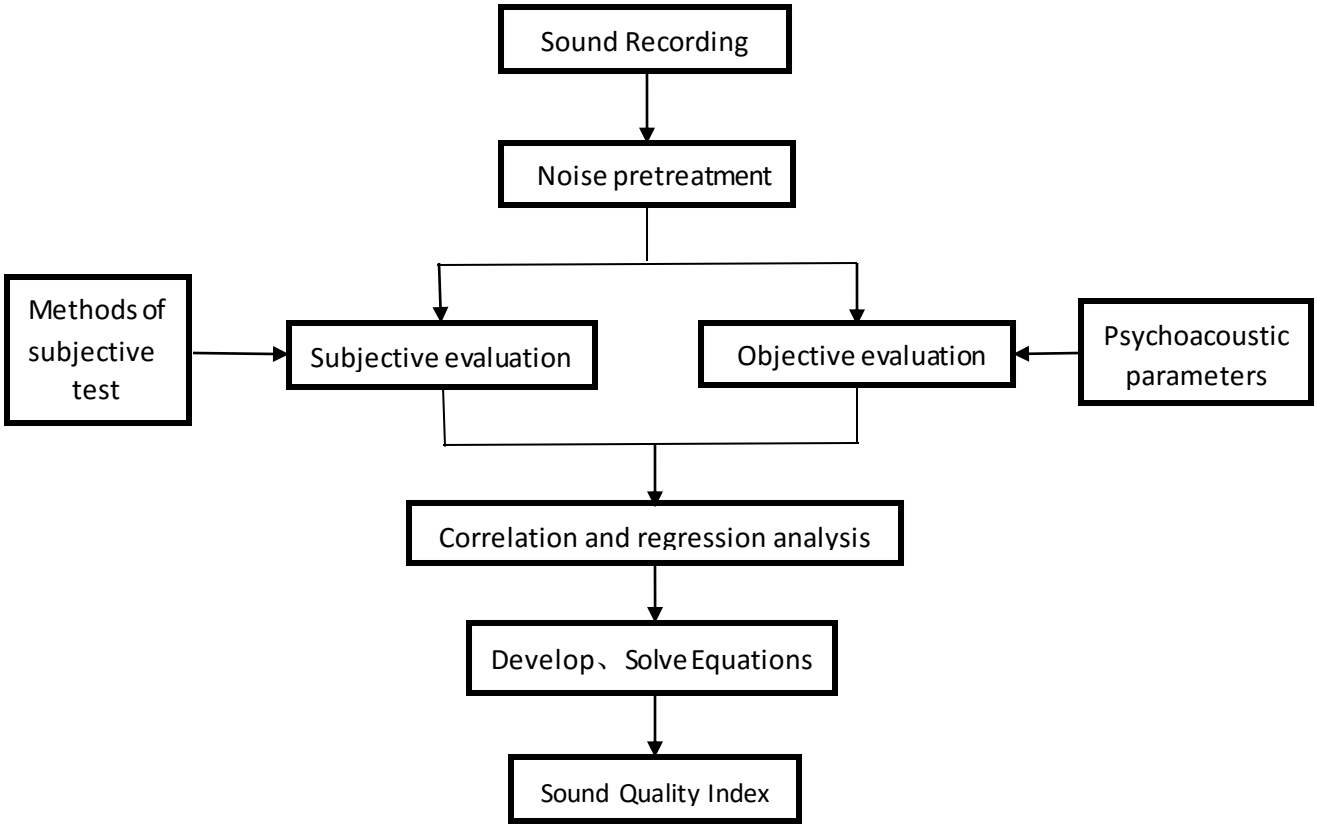

Fig. 2. Schematic evaluation of the Sound Quality

Eq. (1) shows that the SQI is affected by variations of the psycho-acoustic parameters, which is similar to human perception for sound. Currently, the ANC method has become a useful tool to change the psychoacoustic parameters of sound

to actively enhance the auditory qualities of sound fields.

3. Active sound quality control algorithms

ANC has been successfully demonstrated as an effective technique to reduce the unwanted sound for a few decades [28, 71]. The ANC introduces secondary sources, which produce additional noise to control the original source. However, in some applications, it is necessary to retain the residual noise with a specified spectrum [72, 73] because an intentional residual noise can provide better natural feeling. For example, drivers may prefer to enhance the driving experience by hearing the engine and vehicle sound to safely drive the vehicle [74]. Moreover, in some applications, one desires to reduce the sound level and adjust the frequency [75] or balance the amplitudes [43, 76-78] towards the desirable sound quality targets [79, 80]. This approach is known as active sound quality control (ASQC) [43, 77, 78, 81–83], which is a variant of the active noise control method that features a specialized handling algorithmic of the unwanted signal. The ASQC algorithms that have broadly gained attention in the past two decades are reviewed in the following section.

3.1 ANE algorithm

The adaptive noise equalizer (ANE) algorithm, which was proposed by Kuo SM [83, 84], can either attenuate or amplify a predetermined sinusoidal noise [74]. The block diagram of the ordinary narrowband ANE system is shown in Fig. 3 [85], where *P(z)* is the transfer function of the primary path; β is a gain factor to control the amplitude of initial noise [86]. $x_s(n)$ is a noise reference signal for the initial noise; $e(n)$ is an actual residual noise signal; $e'(n)$ is a virtual error signal, which is used to adjust the

weight coefficient vector using the LMS algorithm.

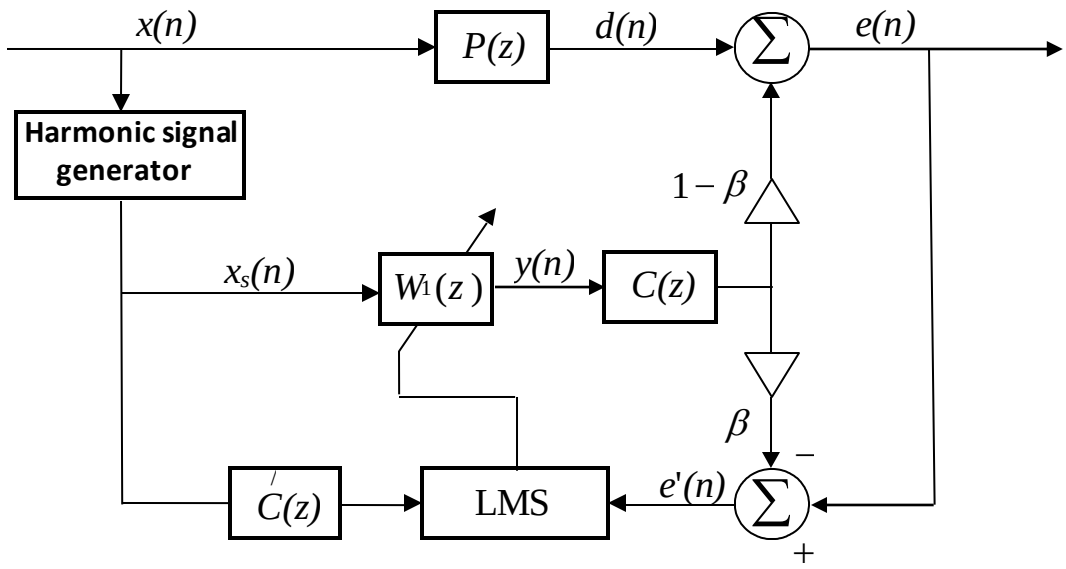

Fig. 3. Block diagram of the narrowband ANE system

In Fig. 3, if the effect of transfer function $C(z)$ is ignored, there should be

$$e(n) = d(n) - (1-\beta)y(n) \tag{2}$$

$$e'(n) = e(n) - \beta y(n) = d(n) - y(n) \tag{3}$$

By introducing $e'(n)$, the updated weight adaptive algorithm will not change the convergence or divergence of the system. If the system achieves a stable convergence, where $d(n) \approx y(n)$, the system output can be written as

$$e(n) = d(n) - (1-\beta)y(n) = \beta y(n) \approx \beta d(n) \tag{4}$$

An advantage of the ANE system is the harmonic signal generator, which can decompose the initial noise signal into several narrowband periodic noise signals with different frequencies by digital filtering and substitutes some harmonic waves of the same frequency. The computer simulation was conducted with M=8. $x(n)$ is the sinusoidal signal, the gain values are β_1 = 0(to cancel the amplitude of $x(n)$

completely), β_2=0.5(to attenuate the amplitude of $x(n)$ by half), β_3=1(to keep the amplitude of $x(n)$ unchanged) and β_4=2(to amplify the amplitude of $x(n)$ by 2). The spectrum of $e(n)$ presents four results of different gain settings showing that the ANE system can reshape the residual noise [85]. This method reserves some other advantages of the active noise control such as the capability of adaptively tracking the exact phase and frequency of the interference, and easy control of bandwidth.

One year later, Kuo SM extended the narrowband ANE technology to a broadband noise control area [87].Based on this new technology, Jinwei Feng proposed the self-tuning ANE algorithm [88], which used a nonlinear adaptive gain factor to compress the disturbance noise level to a band limited range [74]. Jinxin Liu and Xuefeng Chen tuned the gain factors of the ANE based on its derivative and estimation of transmissibility to address the mis-equalization problem [89]. Gonzalez, who introduced the common error multiple-frequency ANE and its multichannel version, successfully performed a real-time 2×2 multichannel system for the active spectral reshaping of multi-frequency noise [90].

3.2 FELMS algorithm

The effective noise reduction of the FxLMS algorithm [35] is premised that the initial noise and reference noise signals should contain the identical frequency of the narrowband periodic signal. Thus, the secondary source signal can effectively cancel the initial noise signal based on the waves from the reference noise signal. In fact, the initial noise contains some unrelated signals to the random elements, and these acoustic signals may cause the pass-band disturbance, which can affect the

convergence speed and control performance of the ANC system [85]. A proper introduction of the second adaptive filter is extremely important to weaken the pass-band disturbance [91-93]. Based on the FxLMS [94], an upgraded algorithm called the filtered-error least-mean-square (FELMS) was proposed in the literature [95, 96], which can effectively compensate for the deficiency of the FxLMS algorithm.

Fig. 4 is the block diagram of the adaptive control system of the FELMS algorithm. In Fig. 4, the difference between FxLMS and FELMS algorithms is the introduction of the secondary adaptive filter, which can be used to purify the residual noise signals. Here, $W_2(z)$ is roughly equivalent to a bandpass filter for the center interference from other frequency components. The irrelevant noise signal in

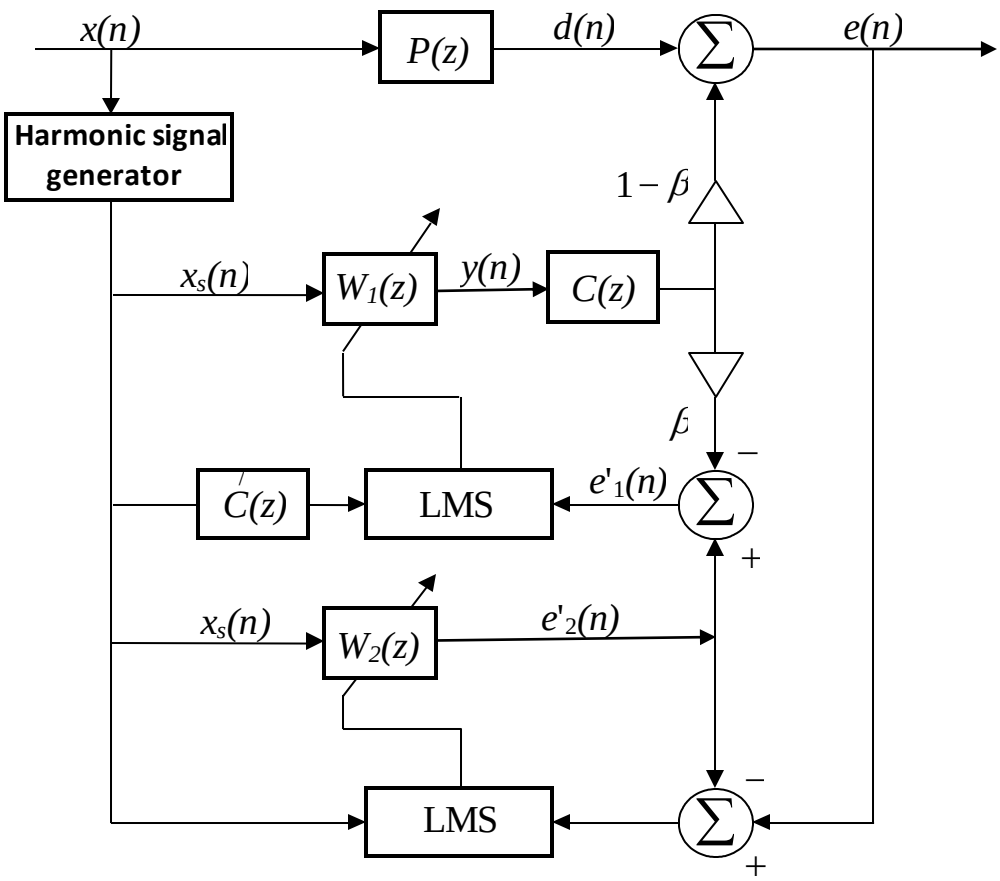

Fig. 4. Block diagram of the ANE system based on the FELMS algorithm

$e(n)$ is significantly reduced when $e(n)$ is filtered by the adaptive filter $W_2(z)$. Furthermore, instead of $e(n)$, the output signal $e_2'(n)$ is entered into the adaptive filter $W_1(z)$, which produces the error signal $e_1'(n)$. $e_1'(n)$ is used to update the weight vector of the adaptive filter $e_1'(n)$ to maintain the convergence speed and control performance of the system.

Simulations are divided into two parts. The first part verifies the superiority of FELMS algorithm compared to FXLMS algorithm. The simulation has been done for the FELMS and FXLMS algorithms under the same conditions and environments. The calculation results show that the FELMS algorithm provides better control performance and faster convergence than the FxLMS algorithm due to the secondary adaptive filter in the FELMS algorithm. While in the second part, the simulation is conducted with $f_1 = 50Hz$, $f_2 = 100Hz$, $f_3 = 200Hz$, and different gain values ($\beta < 2$). The input signal $x(n)$ is the combination of the three sine waves with the same power. The simulation result shows that the FELMS algorithm can effectively control the residual noise spectrum by different gain settings, without affecting neighbour components.

Another variant of the ANE algorithm is the Normalization equalizer filtered-x LMS (NEX-LMS) algorithm, which was developed in [77]. In this algorithm, a normalization filter is added to offer better convergence ability than the ANE algorithm with limited computational complexity.

3.3 SF-cFxLMS algorithm

A simplified Fx-LMS (SF-FxLMS) algorithm was proposed in [97], which enables

one to estimate the relationship between the psychoacoustic analysis results and the parameters of the disturbance. Then, Jaime introduced the complex-domain data to improve the stability of the SF-FxLMS algorithm in response to impulsive disturbances, and developed the SF-cFxLMS algorithm (simplified-form complex FxLMS) [98].

In Fig. 5, the residual noise is measured by the error microphone in the SF-cFxLMS ANC system and written as

$$e(n) = d(n) - y(n) = d(n) - S(z)[W_{l+1}^{T}(n)x(n)] \tag{5}$$

where *y(n)* is the control actuation that superimposes with the primary disturbance *d(n)*, *S(z)* is the real secondary path, $W_{l+1}(n)$ is the adaptive weight vector and *x(n)* is a normalized reference signal. Based on the NEX-LMS strategy [77], the estimated primary disturbance $\hat{d}(n)$ is [99]:

$$\hat{d}(n) = e(n) + \hat{S}(z)[W_{l+1}^{T}(n)x(n)] \tag{6}$$

The Fastest Fourier Transform in the West (FFTW) is used to calculate $\hat{d}(n)$; then, the first (N/2+1) bins are retrained for subsequent operations. The amplitude and relative-phase (block of "Amp/Rel. Phase" in Fig. 5) of the desired components can be estimated as follows:

$$\begin{aligned}\widehat{D}_k(l) &= \mathcal{F}\left[\hat{d}(n)\right] = \mathcal{F}\left(\left[\hat{d}_0(n)\hat{d}_1(n)\cdots\hat{d}_{L-1}(n)\right]^T\right) \\ &= \left[\hat{d}_{DC}(\omega)\hat{d}_1(\omega)\cdots\hat{d}_{N/2}(\omega)\right]^T\end{aligned} \tag{7}$$

Similar to $\hat{d}(n)$, $e(n)$ and $x'(n)$ are estimated as follows:

$$E_k'(l) = \left[e_{DC}(\omega)e_1(\omega)\cdots e_{N/2}(\omega)\right]^T \tag{8}$$

$$X_k'(l) = \left[x_{DC}(\omega)x_1(\omega)\cdots x_{N/2}(\omega)\right]^T \tag{9}$$

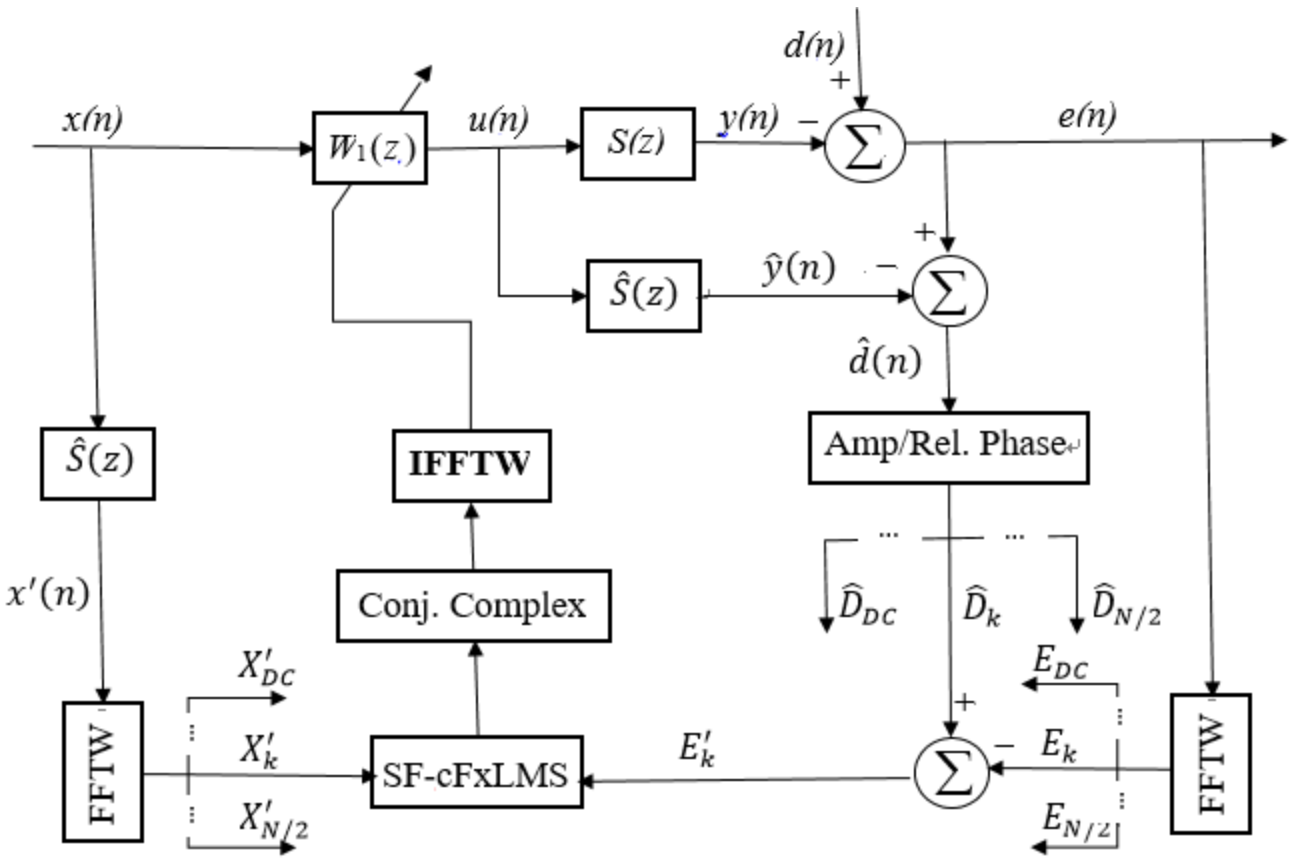

Fig. 5. Block diagram of the SF-cFxLMS ANC system

From Fig. 5, $E'_k(l) = E_k(l) - \widehat{D}_k(l)$ and $x'(n) = \hat{S}(z) * x(n)$ are calculated. Then, after the updating operations ([98] Section 3), the missing complex conjugate part can be calculated from the updated (N/2+1) weights. Therefore, the weight vector $W_{l+1}(n)$ is obtained as follows:

$$W_{l+1}(n) = \mathcal{F}^{-1}[W_{l+1}(\omega)] = \mathcal{F}^{-1}([W_{DC}(\omega)W_1(\omega)\cdots W_N(\omega)]^T) \qquad (10)$$

Eq. (10) is the weight update equation of the SF-cFxLMS algorithm. It is useful to reduce the computational burden and improve the stability of the updating algorithm; thus, the control signal is generated by the adaptive controller:

$$u(n) = W_{l+1}^T(n)x(n) \qquad (11)$$

Computer simulations for controlling the sound quality of low frequency based on loudness and roughness were conducted. Capabilities such as the independent control of a number of narrowband components with a single adaptive filter, adequate convergence speed and an improved convergence procedure face to impulsive disturbances are thoroughly demonstrated through different computer simulation scenarios [98]. Furthermore, the SF-cFxLMS algorithm can emerge as a promising control scheme, as sound quality targets can be achieved with the implementation of the proposed algorithm, even if the disturbance is contaminated with broadband noise.

In the continued study [100], Jaime's group introduced the Multiple-Input, Multiple-Output (MIMO) arrays [101,102] and established the MIMO ASQC system, which compensated for the amplitude and relative phase interferences, while retaining an active effect on the SQ metrics, namely, Loudness and Roughness.

3.4 CMD algorithm

Based on the principle of minimal disturbance [103], the constrained minimal disturbance (CMD) algorithm was proposed by Walter J Kozacky [104]. In this study, constraints are added to limit the filter gain, filter convergence, and filter output power. Then, the Lagrange multiplier [105] method, which helps the CMD algorithm obtain a faster convergence speed, is used to solve the constrained optimization problem [106]. Fig. 6 shows the input, weight, and error vectors of the CMD adaptive filter, which are given by

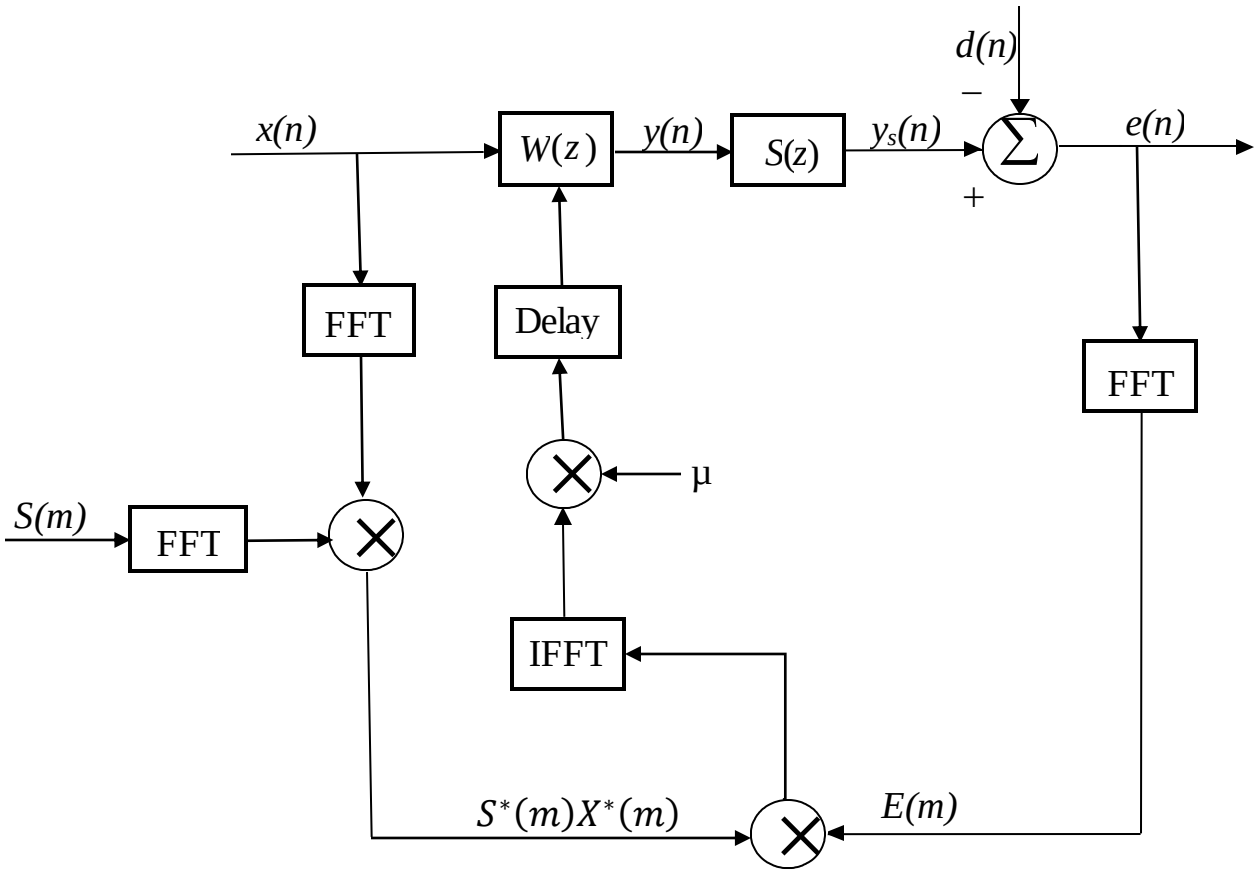

Fig. 6. Block diagram of the CMD adaptive filter with frequency-domain processing

$$x(m) = [x(n)x(n-1)\cdots x(n-N+1)]^T$$

$$w(m) = [w_0(n)w_1(n-1)\cdots w_{N-1}(n)]^T$$

$$e(m) = [e(n)e(n-1)\cdots e(n-N+1)]^T \tag{12}$$

where N is the block size; m is the block iteration. By updating m in each block, the weight vectors are updated using the CMD algorithm, which can minimize the squared Euclidean norm of the frequency domain weight change. The equation is

$$W_k(m+1) = 1 - \mu\gamma_k W_k(m) + \mu_k S_k^*(m) X_k^*(m) E_k(m) \tag{13}$$

where μ is the convergence step size; $\gamma_k = \frac{\alpha_k}{\mu(1+\alpha_k)}$; α_k is a Lagrange multiplier. By taking the IFFT (Inverse Fast Fourier Transform) on both sides of Eq. (13) and casting into a delay-less structure, we obtain the new algorithm

$$w(m+1) = w(m) + \mu IFFT\left\{\frac{S^*(m)X^*(m)E(m)}{S(m)^2 X(m)^2} - \Gamma(m)W(m)\right\} \qquad (14)$$

where $\Gamma(m)$ is a diagonal matrix of variable leakage factors.

(14) is called the weight update equation of the CMD algorithm. The simulations verify the superiority of the CMD algorithm compared to the leaky LMS algorithm in both power-constrained and gain-constrained applications. The frequency response and convergence of the two algorithms are compared in the power-constrained simulation. The CMD algorithm provides faster convergence performance than the leaky LMS algorithm and maintains a 6 dB power reduction over frequency. The CMD algorithm allows the power constraint to be set explicitly, while the leaky LMS algorithm requires a trial and error approach to determine the parameters. In the gain-constrained simulation, the CMD algorithm has better frequency response performance and faster convergence than the leaky LMS algorithm, particularly in coloured noise environments [104].

3.5 PSC-FxLMS algorithm

The phase scheduled command FXLMS (PSC-FXLMS) algorithm, which was proposed by Rees and Elliott [107], uses an internal model to obtain an estimate of the disturbance signal [89,108]. The block diagram of PSC-FXLMS is shown in Fig. 7 [107].

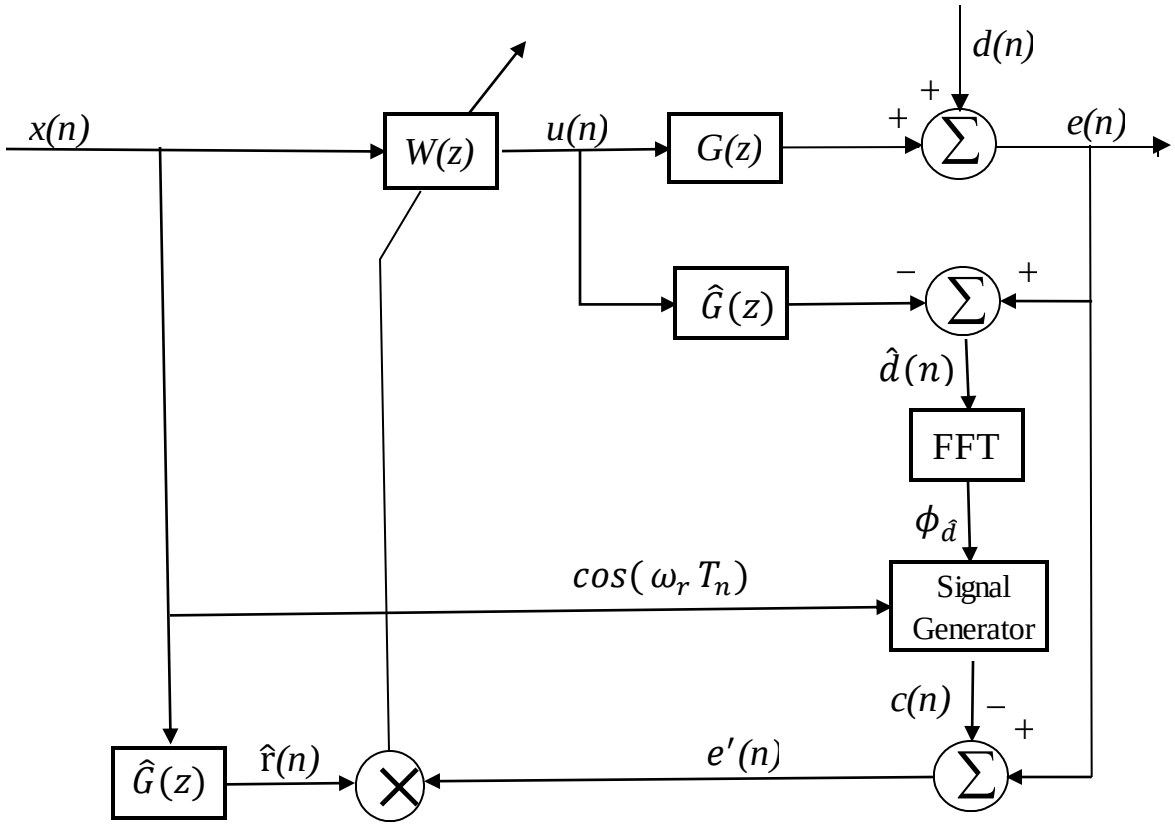

Fig. 7. Block diagram of the PSC-FxLMS algorithm

In Fig. 7, the error signal can be written as

$$e(n) = d(n) + g^T u(n) \tag{15}$$

$$e'(n) = e(n) - c(n) \tag{16}$$

where g^T is the impulse response vector, $c(n)$ is a command signal. The filter weight $w(n)$ of PSC-FXLMS algorithm can be updated as

$$w(n+1) = w(n) - \mu \hat{r}(n) e'(n) \tag{17}$$

where μ is the step size and $\hat{r}(n)$ is the filtered reference signal vector. The disturbance signal $\hat{d}(n)$ is estimated by plant model $\hat{G}(z)$, and $\hat{d}(n)$ can be expressed as

$$\hat{d}(n) = e(n) - \hat{g}^T u(n) = d(n) + g^T u(n) - \hat{g}^T u(n) \tag{18}$$

Furthermore, $u(n)$ is dependent on $c(n)$, since $u(n) = w(n)x(n)$, then the

update weight equation for a single filter coefficient can be written as

$$w(n+1) = w(n) - \mu\hat{r}(n)e'(n) = w(n) - \mu\hat{r}(n)[d(n) + g^T u(n) - c(n)] \quad (19)$$

Then, Rees and Elliott incorporated automatic phase command technique into PSC-FXLMS algorithm to deal with the problem of phase instability when large system gains are needed.

Experimental Sound profiling of a tone was conducted under the condition of a pure 1000 rad (159.16 Hz) tone at a sample rate of 16 samples per period (2.55 kHz) [107]. Experimental results show that the control effort is not excessive when the output is enhanced. The properties of the command-FXLMS algorithm, the internal model FXLMS algorithm, and the PSC-FXLMS algorithm were evaluated, including: the convergence speed, the stability, and the control effort. The command-FXLMS is stable due to the simplicity of the algorithm, but it has excessive control effort. The internal model FXLMS is stable at low gains, and it requires low values of control effort relative to the command-FXLMS. The PSC-FXLMS shows not only to achieve those modes of control capable by the internal model FXLMS with increased gain accuracy, but also with an increase in stability to plant model magnitude errors.

In the continued study [109], Patel and Cheer introduced the MPSC-FxLMS algorithm which allows the phase of the disturbance signal to be detected directly without the need for an additional internal plant model.

3.6 ANNs algorithm

Artificial neural networks (ANNs) recently became a forceful candidate for active noise cancellation [110-114], particularly for the system identification with active

vibration control [115] and nonlinear dynamic problems [116-122]. ANNs, which have been used to model the relationship between subjective and objective evaluations, can describe an annoyance model with a non-stationary noise signal [123-125].

The structure of the ANNs system in [126] is shown in Fig. 8. The outputs of ANNs are the objective rate of sound quality; if it has great correlation with the subjective rate, the outputs of the ANNs become a good sound quality index.

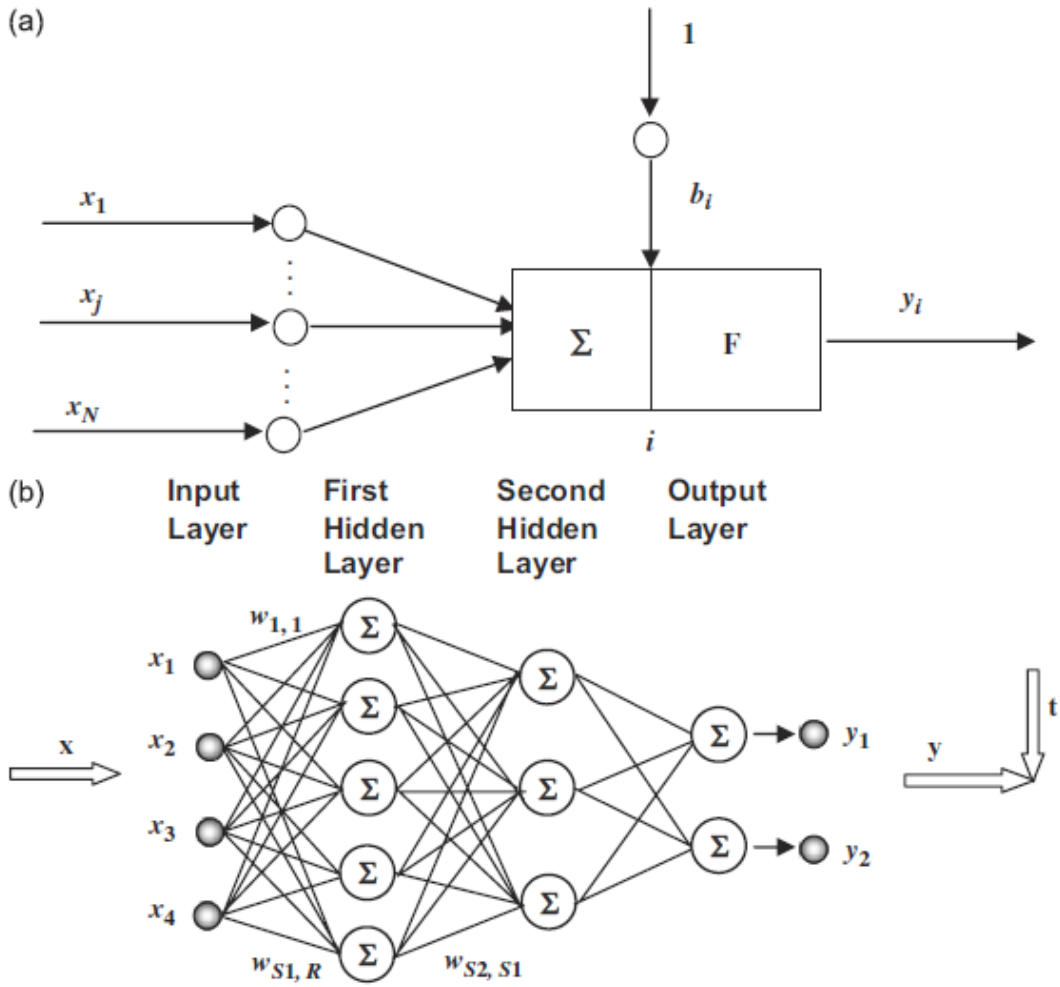

Fig. 8. Structure of ANNs for the noise index: (a) single neuron i; (b) three-layer, back-propagation (BP) network

The main purpose of the ANNs algorithm is to map an input vector $\mathrm{x} \in R^N$ into the output vector $\mathrm{y} \in R^M$, which can be written as:

$$x_{N\times 1} \rightarrow y_{M\times 1} \tag{20}$$

In general

$$x^{(p)} \rightarrow y^{(p)}, \text{ and p=1, 2, 3,..., k} \tag{21}$$

where k is the number of patterns. The network performs this mapping, which consists of processing neurons and their connections. The *i*th single neuron is shown in Fig. 8(a); the input signals x_j are cumulated in a neuron-summing block Σ and export the only output y_i via function F:

$$y_i = F(z_i), z_i = \sum_{j=i}^{N} w_{ij}\, x_j + b_i \tag{22}$$

where z_i is the potential parameter, $w_{i,j}$ is the weight of connection, and b_i is the threshold parameter. The sigmoid function can be written as:

$$F(z) = \frac{1}{1+e^{-\mu z}} \epsilon (0,1) \qquad \text{for } \mu>0 \tag{23}$$

A standard multiplayer network of the input, hidden and output layers is shown in Fig. 8(b). In this figure, N = 4 is the number of inputs; H_1 = 5, and H_2 = 3 are the numbers of neurons in their respective hidden layers; M = 2 is the number of outputs in the output layer. This network can be called the 4–5–3–2 structure network. In this structure, the biases b_i^l and weights $w_{i,j}^l$ (where l is the number of layers) are the network' parameters [125]. Mathematically, the sound quality index using b_i^l and $w_{i,j}^l$ is written by

$$\text{Sound quality index} = F^2[Lw^2 F^1(Iw^1 x + b^1) + b^2] \tag{24}$$

where function F follows the form of Eq. (23), Iw^1 and Lw^2 are the weight matrices of the input layer and the first hidden layer. The trained ANNs were applied to investigate the characteristics of the interior sounds [121-125]. The calculation results show that the output of the trained ANNs has the significant correlation with the

averaged subjective rating of sounds. It is concluded that the output vector of the ANNs can objectively estimate the rate of noise sound. Eq. (24) can be used as a design guide for sound quality with sufficient accuracy and reliability to improve the human subjective satisfaction [123].

4. Selective attenuation method for the ASQC-based ANC scheme

Selective attenuation methods were recently used in ANC schemes [39,126-129], which can reduce the sound pressure level and adjust the sound characteristics. The frequency selective least-mean-square (FSLMS) algorithm has been shown in [39] to be an effective candidate towards the desired selective noise control target; it simultaneously properly eliminates the dysphoric composition and retains the element of pleasure [130].

Fig. 9 is the block diagram of the FSLMS algorithm, where the awaiting cancellation of the original signal is given by:

$$d(n) = d_1(n) + d_2(n) \tag{25}$$

where x (n) is strongly correlated with d (n), after x (n) is filtered by H(z), x'(n) is related to $d_1(n)$, but x'(n) and $d_2(n)$ are irrelevant.

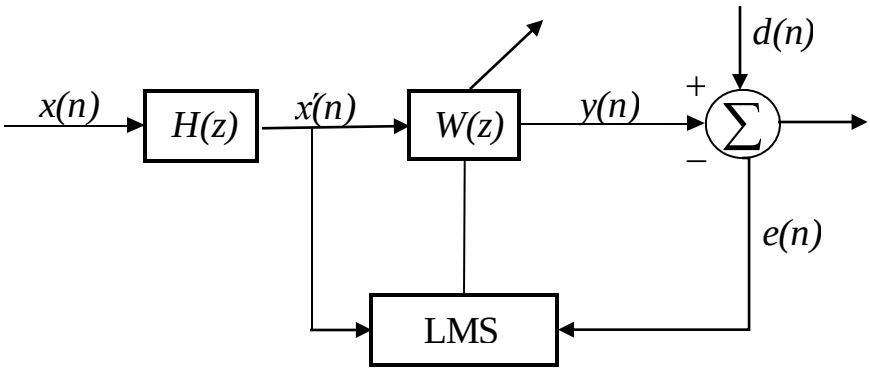

Fig.9. Block diagram of the FSLMS algorithm

Based on the LMS algorithm and the relevant cancellation principle, input,

output, error vector, and weight of the FSLMS adaptive filter are given by:

$$x'(n) = h(n) * x(n) \tag{26}$$

$$y(n) = W^T(n)x'(n) = \hat{d}_1(n) \tag{27}$$

$$e(n) = d(n) - y(n) = d(n) - \hat{d}_1(n) \approx d_2(n) \tag{28}$$

$$w(n+1) = w(n) + 2\mu e(n)x'(n) \tag{29}$$

where (29) is the weight update equation of the FSLMS algorithm, which is relatively near the autocorrelation matrix eigenvalue of signal x'(n), and its convergence condition is:

$$0 < \mu < \frac{1}{E[x'(n)^2]} \tag{30}$$

The FSLMS algorithm based on the feed-forward ANC scheme [131], as shown in Fig. 10, must be considering the effect of the secondary-channel sound delay on the algorithm stability. By imitating the derivation process of the FxLMS algorithm, the equations of the FSLMS algorithm based on the feed-forward ANC scheme are given by:

$$y(n) = W^T(n)x'(n) \tag{31}$$

$$W(n+1) = W(n) - 2\mu e(n)r(n) \tag{32}$$

$$r(n) = x'(n) * h_2(n) = h(n) * x(n) * h_2(n) \tag{33}$$

where $r(n)$ is the input signal of the weight coefficient iterative updating. In Fig. 10, $r(n)$ is obtained from the input signal $x(n)$ and filtered by $H(z)$ and $\hat{S}(z)$.

In practical applications, a multiple FSLMS system can be configured in parallel to cancel the residual noise spectrum when the original noise has multiple harmonics. The simulation was conducted with M=16, step size μ=0.002. The original noise signal

consists of two sine waves with different amplitude embedded in white Gaussian noise of variance 0.1. The spectrum of the original noise signal, d(n), and the spectrum of the converged system output, e(n), are displayed in [39]. It shows that the corresponding frequency components in the original noise signal are offset when the input signal is a single-frequency harmonic signal. While the input signal is superposed by two single-frequency harmonics, the corresponding frequency components in the original noise signal is also adaptively cancelled.

Based on the FSLMS algorithm, some experimental works were conducted by the research group of Wang [132-134]. In these works, an ASQC system in a passenger car was established. Then, the experimental results showed that an obvious offset frequency noise attenuation, with little effect on other frequency noise components, and the loudness and sharpness values were also effectively reduced.

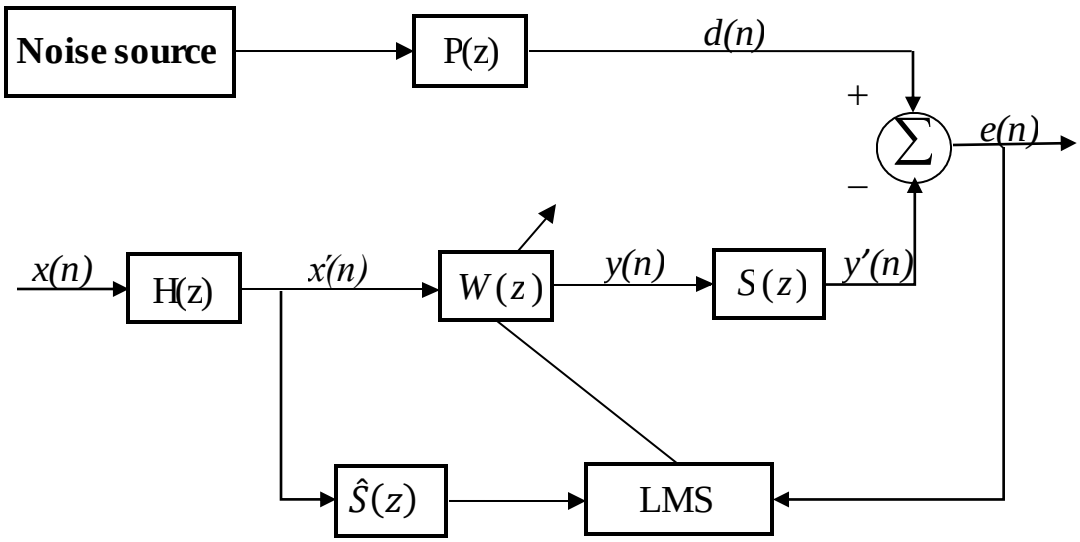

Fig.10. Block diagram of the FSLMS algorithm based on the feed-forward ANC system

5. Conclusion

Sound noise control is desirable to reduce the pressure level and enhance the

auditory qualities of sound fields. The paper has introduced the concept of sound quality, objective evaluation, subjective evaluation and their relationships. Then, we reviewed the active noise control methods with an emphasis on recent developments in sound quality enhancement, which is briefly shown in Table 1. This paper can serve as a reference or a tutorial for beginners in the field of ASQC.

Table 1 Main characteristic of active sound quality control.

Authors	Algorithms	Characteristic	Reference
Kuo	ANE	Attenuate or amplify sinusoidal noise	[83,84]
Kuo / Bao	FELMS	Introduce the secondary adaptive filter to weaken the pass-band disturbance	[95,96]
Sun/Jaime	SF-cFxLMS	Estimate the relationship between psychoacoustic analyses results and the parameters of the disturbance	[97,98]
Walter	CMD	Provide faster convergence and improve frequency response performance	[104]
Rees and Elliott	PSC-FxLMS	Increase the gain accuracy and the stability of the phase errors	[107]
Lee et al.	ANNs	Sound quality index	[123-125]
Jiang and Wang	FSLMS	Eliminate the dysphoric composition and retain the element of pleasure	[39]

Acknowledgment

The financial support of the China Scholarship Council [grant 201607585012] is gratefully acknowledged.

References

[1] Lu Xiaojun, Wang Dengfeng. Infrasound test system and infrasound vs test means of human body physiology function effect. Acta Acustica,2002, 27（1）：27-32.

[2] Nithin V.George, GanapatiPanda. Advances in active noise control: A survey, with emphasis on recent nonlinear techniques. Signal Processing 2013; 93: 363–377.

[3] WANG Deng-feng, LIU Zong-wei, LIANG Jie. Subjective evaluation experiments and

objective quantificational description of vehicle interior noise quality. Journal of Jilin University (Engineering and Technology) 2006; 2: 343–353.

[4] J. Blauert. Product-sound assessments: An enigmatic issue from the point of view of engineering. Proc. internoise94, Yokohama, Japan, 1994; 2: 857-862.

[5] U Jekosch. Meaning in the context of sound quality assessment. Acta Acustica 1999; 85(5): 681-684.

[6] Jiao F L, Liu K. Sound quality in noise control:Ⅱ Subjective assessment [A]. Proceedings of 2003 National Conference Environmental Acoustics [C]. 2003.

[7] Franz K. Brandl, Werner Biermayer. A new tool for the on board objective assessment of vehicle interior noise quality. SAE Paper 1999; 01: 1695.

[8] Kousuke Noumura, Junji Yoshida. Perception modeling and quantification of sound quality in cabin. SAE paper 2003; 01: 1514.

[9] Lijian Zhang. A sensory approach to develop product sound quality criterion. SAE Paper 1999; 01: 1818.

[10] Norm Otto, Scott Amman, Chris Eaton, Scott Lake. Guidelines for jury evaluations of automotive sounds. SAE Paper 1999; 01: 1822.

[11] M. Van Auken, J. W. Zellner and D. T. Kunkel. Correlation of Zwicker's loudness and other noise metrics with driver's over-the-road transient noise discomfort. SAE Paper 1998; 05: 85.

[12] Scott A. Amman, Mike A. Blommer. Psychoacoustic considerations in vehicle ergonomic design. SAE Paper 1999; 01: 1269.

[13] Jun Lu, Jay Pyper, Ronald Weber, Jonathan Fisk. Windshields with new PVB

interlayer for vehicle interior noise reduction and sound quality improvement. SAE Paper 2003; 01: 1587.

[14] Seon-Yang Hwang, Koo-Tae Kang, Byung-Soo Lim, Yoon-Soo Lim. Noise reduction and sound quality improvement of valve train in V6 gasoline engine. SAE Paper 2005; 01: 1834.

[15] Quehl J. Comfort studies on aircraft interior sound and vibration [D]. Carl-von-Ossietzky University Oldenburg; 2001.

[16] Jie Pan, Roshun Paurobally, Xiaojun Qiu. Active noise control in workplaces. Acoust Aust 2016; 44: 45–50.

[17] Patsouras Ch. Psychoacoustic evaluation of tonal components in view of sound quality design for high speed train interior noise. Acoustical Science &Technology 2004; 23(2): 113-116.

[18] Vos J. Annoyance caused by magnetic levitation train transrapid 08-a laboratory study [M]. TNO Report; 2003.

[19] Jeon J Y，You J，Kim Y. S. Evaluation of sound quality of air-conditioning Noise [A]. Proceeding of The 9th Western Pacific Acoustic Conference [C]. Seoul, Korea; 2006.

[20] Jin Yong Jeon. Sound radiation and sound quality characteristics of refrigerator noise in real living Environments. Applied Acoustics 2006; 06: 005.

[21] Cong Zhang. Subjective evaluation of sound quality for mobile spatial digital audio. 2008 International Conference on Computer Science and Software Engineering, p: 250-253.

[22] Ishiyama T, Hashimoto T. The impact of sound quality on annoyance caused by road traffic noise: an influence of frequency spectra on annoyance. JSAE Review, 21： 225-230.

[23] Yang W, Kang J. Acoustic comfort evaluation in urban open public spaces. Applied Acoustics 2005; 66: 211-229.

[24] Mutsumi Ishibashi, Anna Preis, Fumiaki Satoh, Hideki Tachibana. Relationships between arithmetic averages of sound pressure level calculated in octave bands and Zwicker's loudness level. Applied Acoustics 2006; 67: 720-730.

[25] Nicola Prodi, Sylvia Velecka. The evaluation of binaural playback systems for virtual sound fields. Applied Acoustics 2003; 64: 147-161.

[26] C. M. Harris. Handbook of acoustical measurements and noise control. New York; 1991.

[27] Xu Yongcheng, Wen Xisen, Chen Xun. An overview on active noise control technology and application. Journal of National University of Defense Technology. 2001; Vol.23 (No.2): 119-124.

[28] S.M. Kuo, D.R. Morgan. Active noise control systems: algorithms and DSP implementations. New York: Wiley; 1996.

[29] Lueg P. Process of silencing sound oscillations [P]. United States, Patent 2043416, 1936.

[30] H.F. Olson, E.G. May. Electronic sound absorber. Journal of the Acoustical Society of America 1953; 25 (6): 1130–1136.

[31] Liu Enze, Yan Jikuan, Chen Duanshi. Survey and development trend of active

noise control system. Noise and Vibration Control 1999; 3: 2-6.

[32] Nelson P A, Elliott S J. Active control of sound [M]. Academic Press, London; 1992.

[33] Manpeil Tamamura, Eiji Shibata. Application of active noise control for engine related cabin noise. JSAE Review 1996.

[34] Jerome Couche. Active control of automobile cabin noise with conventional and advanced speakers. Master thesis, Virginia 1999.

[35] B. Widrow, S.D. Stearns. Adaptive signal processing, prentice-hall. Engle Wood Cliffs, NJ 1985.

[36] F. Russo, G.L. Sicuranza. Accuracy and performance evaluation in the genetic optimization of nonlinear systems for active noise control. IEEE Transactions on Instrumentation and Measurement 2007; 56 (4): 1443–1450.

[37] M.A. Sahib, R. Kamil. Comparison of performance and computational complexity of nonlinear active noise control algorithms. ISRN Mechanical Engineering 2011: 1–9.

[38] M. G. Larimore, J. R. Treichler, C. R. Johnson. SHARF: An algorithm for adaptive IIR digital filters. IEEE Trans. Acoust, Speech, Signal Processing 1980; vol. ASSP-28: 428–440.

[39] Jiang Ji-guang, Wang Deng-feng. Active control of vehicle interior noise based on selective attenuation method. Second International Conference on Information and Computing Science. Manchester, UK; 2009.

[40] Joachim Scheuren, Ulrich Widmann, Jens Winkler. Active noise control and

sound quality design in motor vehicles. SAE Paper 1999; 01: 1846.

[41] A. Gonzalez, M. Ferrer, M. de Diego, G. Pinero, J. J. Garcia-Bonito. Sound quality of low-frequency and car engine noises after active noise control. Journal of Sound and Vibration 2003; 265: 663-679.

[42] M. de Diego, A. Gonzalez, G. Pinero, M. Ferrer, J. J. Garcia-Bonito. Subjective evaluation of actively controlled interior car noise. Acoustics, Speech, and Signal Processing; 2001.

[43] Sen M. Kuo, Ravi K. Yenduri. Frequency-domain delay less active sound quality control algorithm. Journal of Sound and Vibration 2008; 318: 715–724.

[44] Chambers J, Bullock D, Kahana Y, Kots A, Palmer A. Developments in active noise control sound systems for magnetic resonance imaging. Applied Acoustics 2007; 68:281–95.

[45] Hua Bao, Issa M.S. Panahi. Psychoacoustic active noise control with ITU-R 468 noise weighting and its sound quality analysis. 32nd Annual International Conference of the IEEE EMBS Buenos Aires, Argentina, August 31 - September 4; 2010.

[46] R.R. Leitch, M.O. Tokhi. Active noise control system. IEEE Proceedings Part A 134 1987; 6: 525–546.

[47] S.J. Elliott, P.A. Nelson. Active noise control. IEEE Signal Processing Magazine 1993; 4: 12–35.

[48] S.M. Kuo, D.R. Morgan. Active noise control: a tutorial review. Proceedings of the IEEE 1999; 6: 943–975.

[49] Nikhil Cherian Kurian, Kashyap Patel, Nithin V. George. Robust active noise control: An information theoretic learning approach. Applied Acoustics 2017; 117: 180–184.

[50] Liu Zongwei, Wang Dengfeng, Liang Jie. Research and advance meat on subjective evaluation and improvement of vehicle interior noise quality. Automobile Technology 2006; 7: 1-4.

[51] Rossi F, Nicolini A, Filipponi M. An index for motor vehicle passengers acoustical comfort. The 32nd international congress and exposition on noise control engineering Korea; 2003.

[52] Bodden M. Instrumentation for sound quality evaluation. Acustica 1997; 83: 775-783.

[53] E. Zwicker, H. Fastl. Psychoacoustics. Facts and Models, Second Ed. Springer-Heidelberg, Berlin, Germany; 1999.

[54] Wang Dengfeng, Liu Xueguang, Liu Zongwei. Layout experiment of secondary sound source for adaptive active noise control system in vehicle interior. China Journal of Highway and Transport 2006; 19(3): 122-126.

[55] B&K, Lecture Note, Introduction to sound quality, 2004.

[56] Acoustics: Method for calculating loudness level. ISO532-1975.

[57] Procedure for calculating loudness level and loudness. DIN45631-1991.

[58] Bismarck, V. Sharpness as an attribute of the timbre of steady sounds. Acoustica 1974; 30: 159-172.

[59] Aures, W. The sensory euphony as a function of auditory sensations. Acoustica 1985; 58: 282-290.

[60] Jiang Ji-guang, Wang Deng-feng. Objective evaluation model for interior sound quality research. Third International Conference on Modelling and Simulation. June 4–5, China, 2010.

[61] Aures, W. A procedure for calculating auditory roughness. Acoustica 1985; 58: 268-281.

[62] Zwicker, E., Fastl, H. Psychoacoustics: Facts and Models, second. Springer Verlag, Berlin; 1999.

[63] Mao Dong-xing, ZHANG Bao-long. Performance of semantic differential method with an anchor stimulus in subjective sound quality evaluation. Technical Acoustics 2006; 25(6): 560-567.

[64] Altinsoy E, Kanca G, Belek HT. A comparative study on the sound quality of wet-and-dry type vacuum cleaners. The sixth international congress on sound and vibration, Denmark; 1999.

[65] Osgood C E, Tannenbaum P H, Suci G J. The measurement of meaning [M]. Urbana: University of Illinois Press, 1957.

[66] Schulte-Fortkamp B. The quality of acoustic environments and the meaning of soundscapes [A]. Proceedings of the 17th International Congress on Acoustics [C]. Rome, Italy; 2001.

[67] Hashimoto T, Hatano S. Effect of factors other than sound to the perception of sound quality. Proceedings of the 17th International Congress on Acoustics [C]. Rome, Italy; 2001.

[68] Zeitler A, Hellbrück J. Semantic attributes of environmental sounds and their

correlations with psychoacoustic magnitudes. Proceedings of the 17th International Congress on Acoustics [C]. Rome, Italy; 2001.

[69]David, H.A. The method of Paired Comparisons, 2nd London, Chapman and Hall, 1988.

[70] Mohd Jailani Mohd Nor, Mohammad Hosseini Fouladi, Hassan Nahvi, Ahmad Kamal Ariffin. Index for vehicle acoustical comfort inside a passenger car. Applied Acoustics 2008; 69: 343–353.

[71] S.J. Elliott. Signal Processing for active control. Academic Press, San Diego, Calif.; London, 2001.

[72] Y.-S. Lee, S. J. Elliott. Active position control of a flexible smart beam using internal model control. Journal of Sound and Vibration 2011; 242(5): 767–791.

[73] D. Bismor. LMS algorithm step size adjustment for fast convergence. Archives of Acoustics 2012; 37(1): 31-40.

[74] Feng Liu, James K. Mills, Mingming Dong, Liang Gu. Active broadband sound quality control algorithm with accurate predefined sound pressure level. Applied Acoustics 2017; 119: 78–87.

[75] L.P.R. de Oliveira, K. Janssens, P. Gajdatsy, H. van der Auweraer, P.S. Varoto, P. Sas, W. Desmet. Active sound quality control of engine induced cavity noise. Mechanical Systems and Signal Processing 2009; 23: 476–488.

[76] J. Cheer, S. J. Elliott. Multichannel control systems for the attenuation of interior road noise in vehicles. Mech. Syst. Signal Process. 2015; 60: 753–769.

[77] L.P.R. de Oliveira, B. Stallaert, K. Janssens, H. van der Auweraer, P. Sas, W.

Desmet. NEX-LMS: a novel adaptive control scheme for harmonic sound quality Control. Mechanical Systems and Signal Processing 2010; 24: 1727–1738.

[78] Lee HH, Lee SK. Objective evaluation of interior noise booming in a passenger car based on sound metrics and artificial neural networks. Applied Ergonomics 2009; 40(5): 860–869.

[79] J.A. Mosquera-Sánchez, J.D. Villalba, L.P.R. de Oliveira. A multi-objective optimization procedure for guiding the active sound quality control of multiharmonic disturbances in cavities. Proceedings of Internoise 2013.

[80] J.A. Mosquera-Sánchez, W. Desmet, K. Janssens, L.P.R. de Oliveira. Towards sound quality metrics balance on hybrid powertrains. Proceedings of ICED 2015.

[81] C.A. Powell, B.M. Sullivan. Subjective response to propeller airplane interior sounds modified by hypothetical active noise control systems. Noise Control Engineering Journal 2001;49 (3): 125–136.

[82] H. Bao, I. Panahi. Using A-weighting for psychoacoustic active noise control. Proc. Int. Conf. IEEE Eng. Med. Biol. Soc., Vancouver, British Columbia, Canada; 2009: 5701-5704.

[83] Kuo SM, Ji MJ. Principle and application of adaptive noise equalizer. IEEE Trans Circuits Systems II: Analog Digital Signal Process 1994; 41: 471–4.

[84] Kuo SM, Ji MJ. Development and analysis of an adaptive noise equalizer. IEEE Trans Speech Audio Process 1995; 3: 217–222.

[85] Deng-feng Wang, Ji-guang Jiang, Zong-wei Liu, Xiao-lin Cao. Research on ANE algorithm for sound quality control of vehicle interior noise. 3rd International

Conference on Information and Computing 2010; 107-110.

[86] Feng JW, Gan WS. Adaptive active noise equalizer. IEEE Electronics Letters 1997; 33(18), 1518-1519.

[87] Kuo SM, Yajie Y. Broadband adaptive noise equalizer. IEEE Signal Process 1996; 3: 234-235.

[88] Feng J, Gan W-S. A broadband self-tuning active noise equalizer. Signal Process 1997; 62: 251-256.

[89] Jinxin Liu, Xuefeng Chen. Adaptive compensation of mis-equalization in narrowband active noise equalizer systems. IEEE/ACM Transactions on Audio, Speech, and Language Processing 2016; 24(12):2390-2399.

[90] Gonzalez A, de Diego M, Ferrer M, Pinero G. Multichannel active noise equalization of interior noise. IEEE Trans Audio, Speech, Language Process 2006; 14: 110-22.

[91] S. M. Kuo, M. Tahernezhadi, L. Ji. Frequency-domain periodic active noise control and equalization. IEEE Transactions on Speech and Audio Processing 1997; 05, 348-358.

[92] S. M. Kuo, M. J. Ji. Pass band disturbance reduction in adaptive narrowband noise control systems. IEEE Transactions on Circuits System I 1999; 46: 220-223.

[93] S. Mallu. Integration and optimization of active noise equalizer with filtered error least mean square algorithm. MS Thesis, Northern Illinois University 2005.

[94] Seokhoon Ryu, Yun Jung Park, Young-Sup Lee. Active suppression of narrowband noise by multiple secondary sources. Journal of Sensors 2016: 1-9.

[95] S.M. Kuo, J. Tsai. Residual noise shaping technique for active noise control systems. J. Acoustical Soc. America, 1994; 95(3): 1665-1668.

[96] Hua Bao, Issa M.S. Panahi. A perceptually motivated active noise control design and its psychoacoustic analysis. ETRI Journal 2013; 35(5): 859-868.

[97]X.Sun, G.Meng. LMS algorithm for active noise control with improved gradient estimate. Signal Process 2006; 20: 920–938.

[98] Jaime A. Mosquera-Sánchez, Leopoldo P.R. de Oliveira. A multi-harmonic amplitude and relative-phase controller for active sound quality control. Mechanical Systems and Signal Processing 2014; 45: 542–562.

[99]B.Farhang-Boroujeny. Adaptive filters: theory and applications. John Wiley & Sons England; 1998.

[100] Jaime A. Mosquera-Sánchez, Wim Desmet, Leopoldo P.R. de Oliveira. A multichannel amplitude and relative-phase controller for active sound quality control. Mechanical Systems and Signal Processing 2017; 88: 145–165.

[101] J.A. Mosquera-Sánchez, K. Janssens, W. Desmet, L.P.R. de Oliveira. Multichannel active sound quality control for independent-channel sound profiling. Euro noise 2015.

[102] Jaime A. Mosquera-Sánchez, Wim Desmet, Leopoldo P.R. de Oliveira. Multichannel feed forward control schemes with coupling compensation for active sound profiling. Journal of Sound and Vibration 2017; 396: 1–29.

[103] S Haykin. Adaptive filter theory. Prentice-Hall, Upper Saddle River, NJ, 2002.

[104] Walter J Kozacky, Tokunbo Ogunfunmi. An active noise control algorithm with

gain and power constraints on the adaptive filter. EURASIP Journal on Advances in Signal Processing 2013:17.

[105] R Fletcher, Practical Methods of Optimization. New York, Wiley: 1987.

[106] WJ Kozacky, T Ogunfunmi. Convergence analysis of a frequency-domain adaptive filter with constraints on the output weights. Conference on Signals, Systems, and Computers USA, 2009: 1350–1355.

[107]L. E. Rees, S. J. Elliott. Adaptive algorithms for active sound-profiling. IEEE/ACM Transaction on Audio, Speech and Language Processing, 2006; 14(2), 711-719.

[108] Chuansheng Xiao, Fengyan An. Stability analysis of broadband active noise equalization algorithm. Proceedings of 20th International Congress on Acoustics, 23-27 August 2010, Sydney, Australia.

[109] Vinal Patel, Jordan Cheer. Modified phase-scheduled-command FxLMS algorithm for active sound profiling. IEEE/ACM Transaction on Audio, Speech and Language Processing, 2017; 25(9), 1799-1808.

[110] Q.Z. Zhang, X.D. Li, W.S. Gan. Active noise control using a simplified fuzzy neural network. Journal of Sound and Vibration 2004; 272: 437-449.

[111] Y.L. Zhou, Q.Z. Zhang, X.D. Li, W.S. Gan. Analysis and DSP implement of an ANC system using a filtered-error neural network. Journal of Sound and Vibration 2005; 285: 1-25.

[112] Lee SK, Kim TG, Lim JT. Characterization of an axle-gear whine sound in a sports utility vehicle and its objective evaluation based on synthetic sound technology and an artificial neural network. Proc I Mech E Part D: J Automobile Engineering

2008; 222(3): 383–396.

[113] Lee SK, Kim BS, Park DC. Objective evaluation of the rumbling sound in passenger cars based on an artificial neural network. Proc I Mech E Part D: J Automobile Engineering 2005; 219(4): 457–469.

[114] S.K. Lee, H.C. Chae, D.C. Park, S.G. Jung. Sound quality index development for the booming noise of automotive sound using artificial neural network information theory. Sound Quality Symposium 2002, Michigan USA, CD N0.5.

[115] P.Q. Xia. An inverse model of MR damper using optimal neural network and system identification. Journal of Sound and Vibration 2003; 266: 1009-1023.

[116] S. Tomasiello. An application of neural networks to a nonlinear dynamics problem. Journal of Sound and Vibration 2004; 272: 461-467.

[117] J.C. Patra. Chebyshev neural network-based model for dual- junction solar cells. IEEE Transactions on Energy Conversion 2011; 26 (1): 132–139.

[118] J.C. Patra, P.K. Meher, G. Chakraborty, Nonlinear channel equalization for wireless communication systems using Legendre neural networks. Signal Processing 2009; 89 (11): 2251–2262.

[119] N.V. George, G. Panda. A reduced complexity adaptive Legendre neural network for nonlinear active noise control. Proceedings of the 19th International Conference on Systems, Signals and Image Processing 2012: 560–563.

[120] J.C. Patra, P.K. Meher, G. Chakraborty. Development of Laguerre neural-network-based intelligent sensors for wireless sensor net- works. IEEE Transactions on Instrumentation and Measurement 2011; 60 (3): 725–734.

[121] D.P. Das, G. Panda, Active mitigation of nonlinear noise processes using a novel filtered-s LMS algorithm. IEEE Transactions on Speech and Audio Processing 2004; 12 (3): 313–322.

[122] J.C.Patra, R.N.Pal, B.N.Chatterji, G.Panda. Identification of nonlinear dynamic systems using functional link artificial neural networks. IEEE Transactions on Systems, Man, and Cybernetics—Part B: Cybernetics 1999; 29(2): 254–262.

[123] Eui-Youl Kim, Tae Jin Shin, Sang Kwon Lee. New tonality design for non-stationary signal and its application to sound quality for gear whine sound. Journal of Automobile Engineering 2013; 227(3): 311-322.

[124] Lee HH, Kim SK, Lee SK. Design of new sound metric and its application for quantification of an axle gear whine sound by utilizing artificial neural network. J Mechanical Science and Technology 2009; 23(4):1182-1193.

[125] Sang-Kwon Lee. Objective evaluation of interior sound quality in passenger cars during acceleration. Journal of Sound and Vibration 2008; 310: 149-168.

[126] S. Hu, R. Rajamani, X. Yu. Active noise control for selective cancellation of eternal disturbances. 2011 American Control Conference on O'Farrell Street, San Francisco, CA, USA June 29 - July 2011; 01: 4737-4742.

[127] Marco Bergamasco, Fabio Della Rossa, Luigi Piroddi. Active noise control of impulsive noise with selective outlier elimination. 2013 American Control Conference Washington, DC, USA, 2013; 4165-4170.

[128]EmmanuelA. Ntumy, SergeyV. Utyuzhnikov. Active sound control in composite regions. Applied Numerical Mathematics 2015; 93: 242–253.

[129]K.V.Devara. Active noise cancelling headset and devices with selective noise suppression, Patent WO2002082422 A2, 2002.

[130] Liu Zong-wei, Wang Deng-feng, Liang Jie. Study and development of subjective evaluation of inner noise quality and improvement. Automobile Technology 2006; 7: 1-4.

[131] Joplin P M, Nelson P A. Active control of low frequency random sound in enclosures. J. Acoust. Soc. Am. 1990; 87: 2396-2404.

[132] Jiang Jiguang, Wang Dengfeng. Research on active control of vehicle interior noise based on selective attenuation method. Science Technology and Engineering 2014; 12: 288-291.

[133] Jiang Ji-guang, Wang Deng-feng. Subjective and objective evaluation of vehicle interior noise sound quality preference and correlation research. Automotive Technology 2012; 8: 6-10.

[134] Ji-guang Jiang. Adaptive active control system of vehicle noise design and test. 2014 2nd World Congress on Industrial Materials Application, Products, and Technologies 2014:251-256.