(12) UK Patent Application (19) GB (11) 2 361 990 (13) A

(43) Date of A Publication 07.11.2001

(21) Application No 0010519.7

(22) Date of Filing 03.05.2000

(71) Applicant(s)
JK Microtechnology Ltd
(Incorporated in the United Kingdom)
740 Heeley Close, Sittingbourne Research Centre,
SITTINGBOURNE, ME9 8HL, United Kingdom

(72) Inventor(s)
Ata ul-Habib Khalid
James Leslie Luck

(74) Agent and/or Address for Service
JK Microtechnology Ltd
740 Heeley Close, Sittingbourne Research Centre,
SITTINGBOURNE, ME9 8HL, United Kingdom

(51) INT CL^7
F24H 3/00 , H05B 3/84

(52) UK CL (Edition S)
F4S S60A

(56) Documents Cited
EP 0582457 A2 WO 96/27271 A1 JP 630156934 A
US 5354966 A US 4352006 A

(58) Field of Search
UK CL (Edition R) F4S S60A S60B S60C
INT CL^7 F24C 7/04 , F24H 3/00 3/04 , H05B 3/84
ONLINE: WPI, EPODOC, JAPIO

(54) Abstract Title
Transparent electric convection heater

(57) An optically transparent electrically heated convection heater for use as a space heater in homes, offices, shops. Typically, said convection heater consists of a transparent layer 1 upon which is deposited a layer of a transparent electrically conductive material 2 such as indium-tin-oxide, electrodes 3 and 3a are formed on opposite edges of the transparent electrically conductive layer 2 and electrical wires 4 and 4a are connected to the electrodes. The transparent electrically conductive layer 2 is sandwiched between layer 1 and another transparent layer 1a. The passage of an electrical current through the optically transparent conductive layer 2 causes it to be heated according to the Joule effect, thereby heating the transparent panels 1 and 1a and the surrounding air by convection.

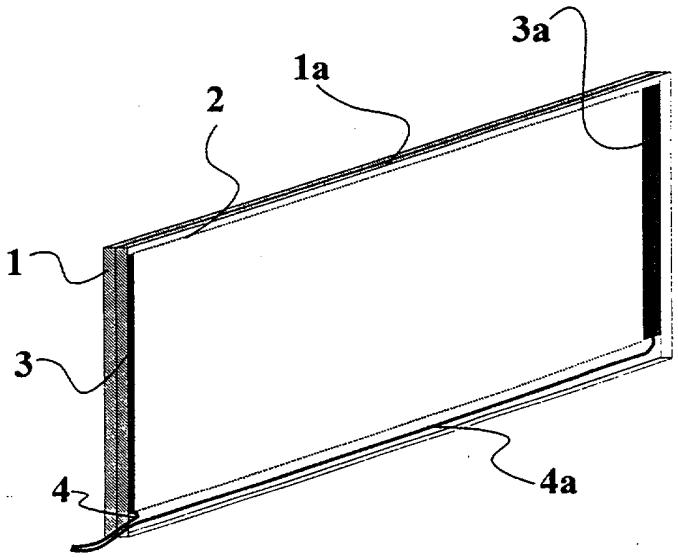

Figure 2

GB 2 361 990 A

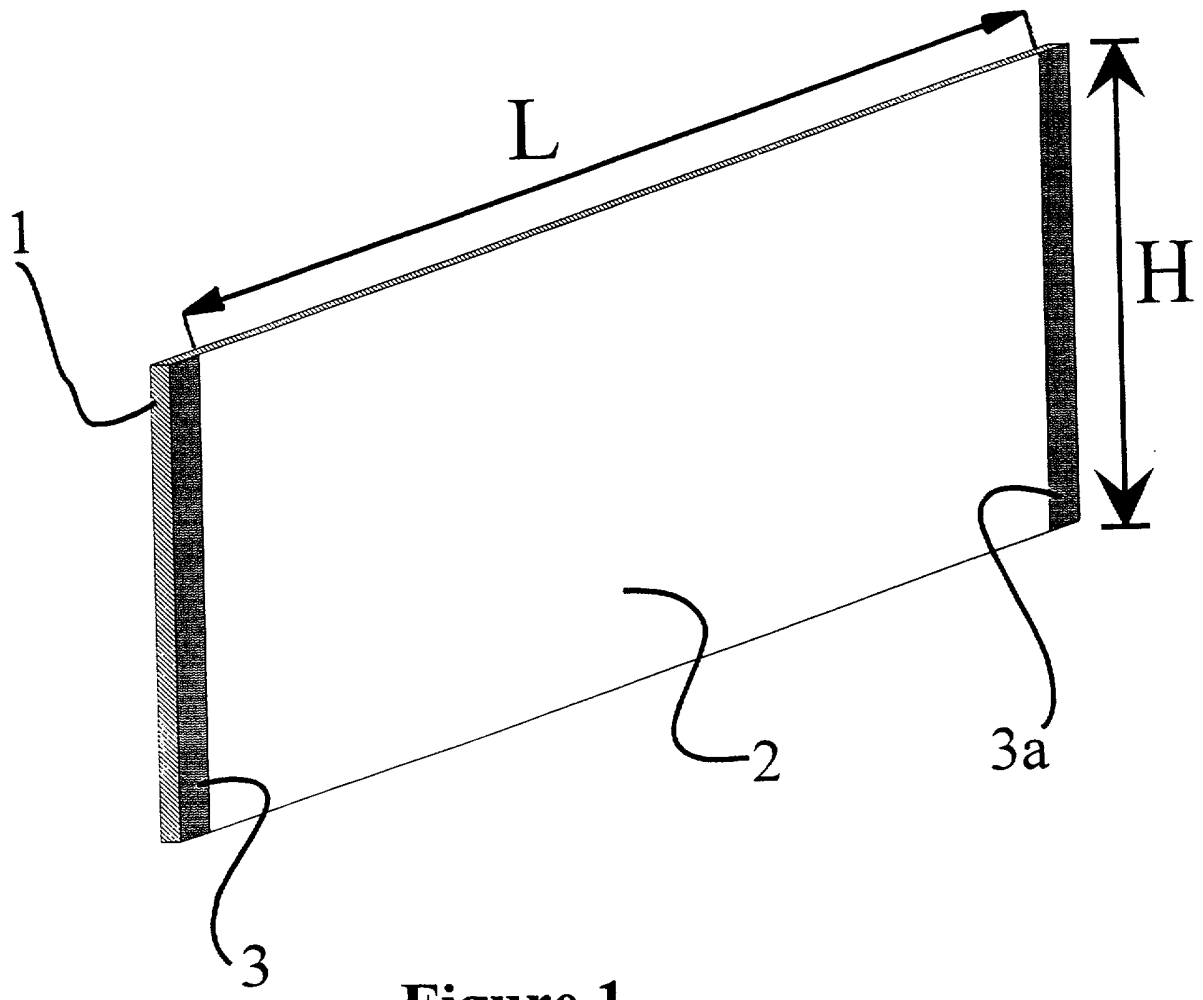

Figure 1

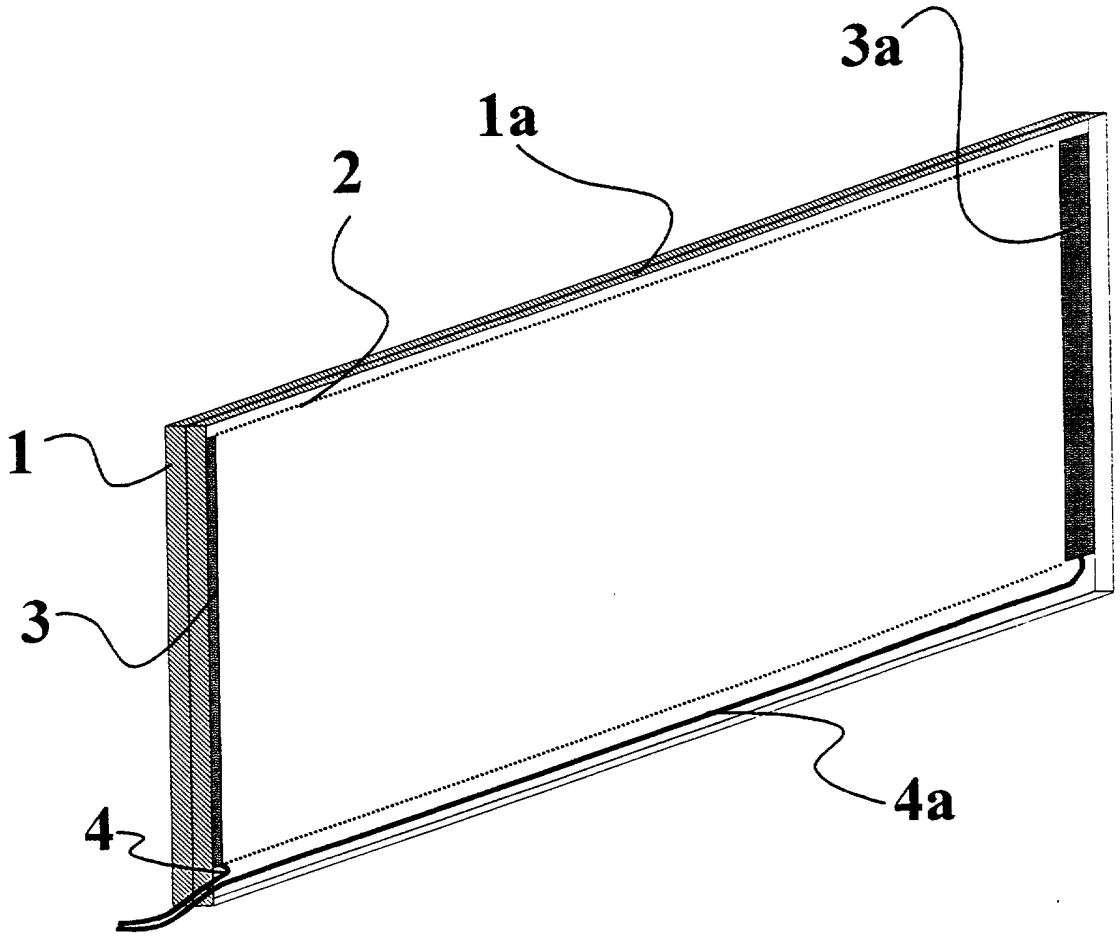

Figure 2

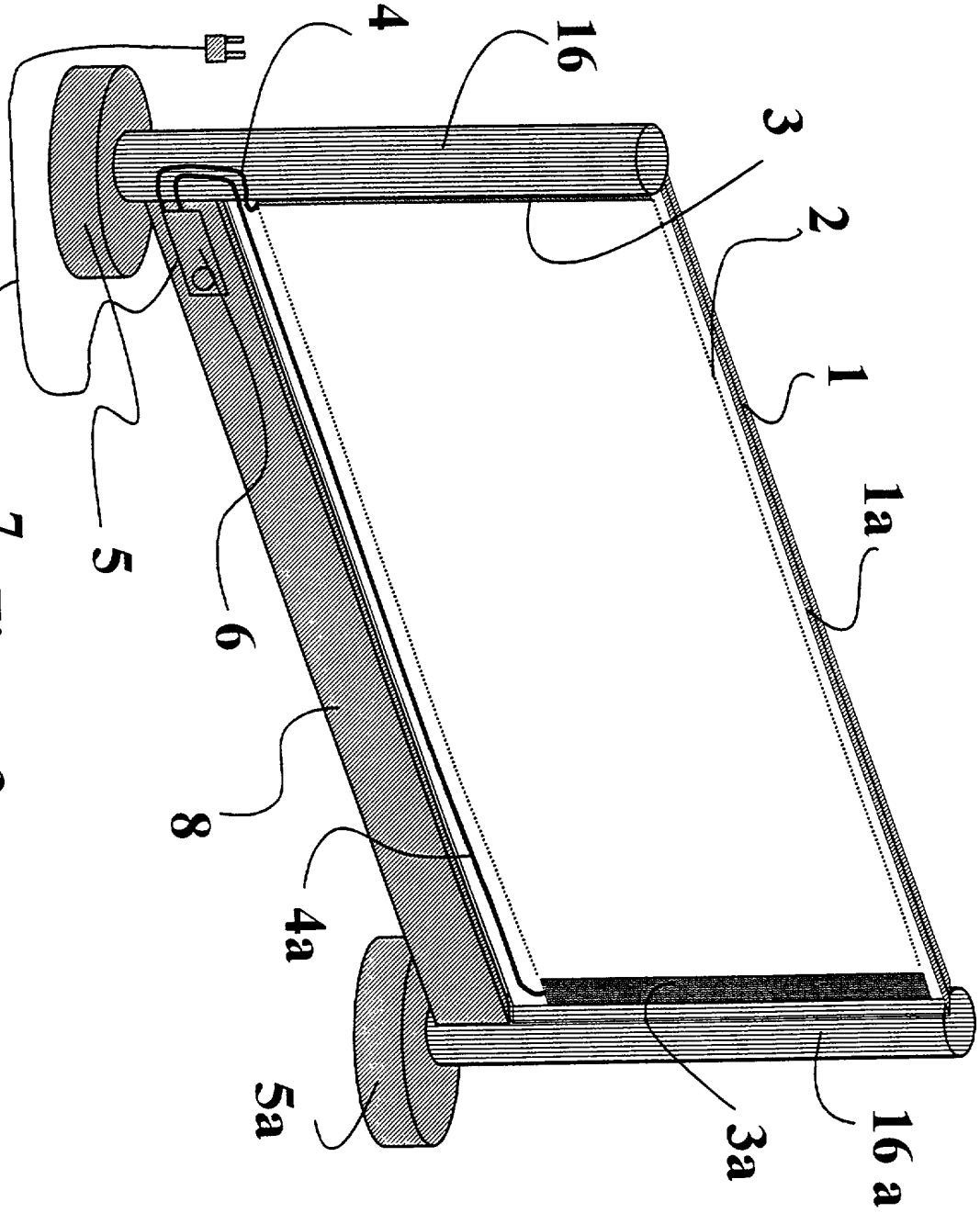

Figure 3

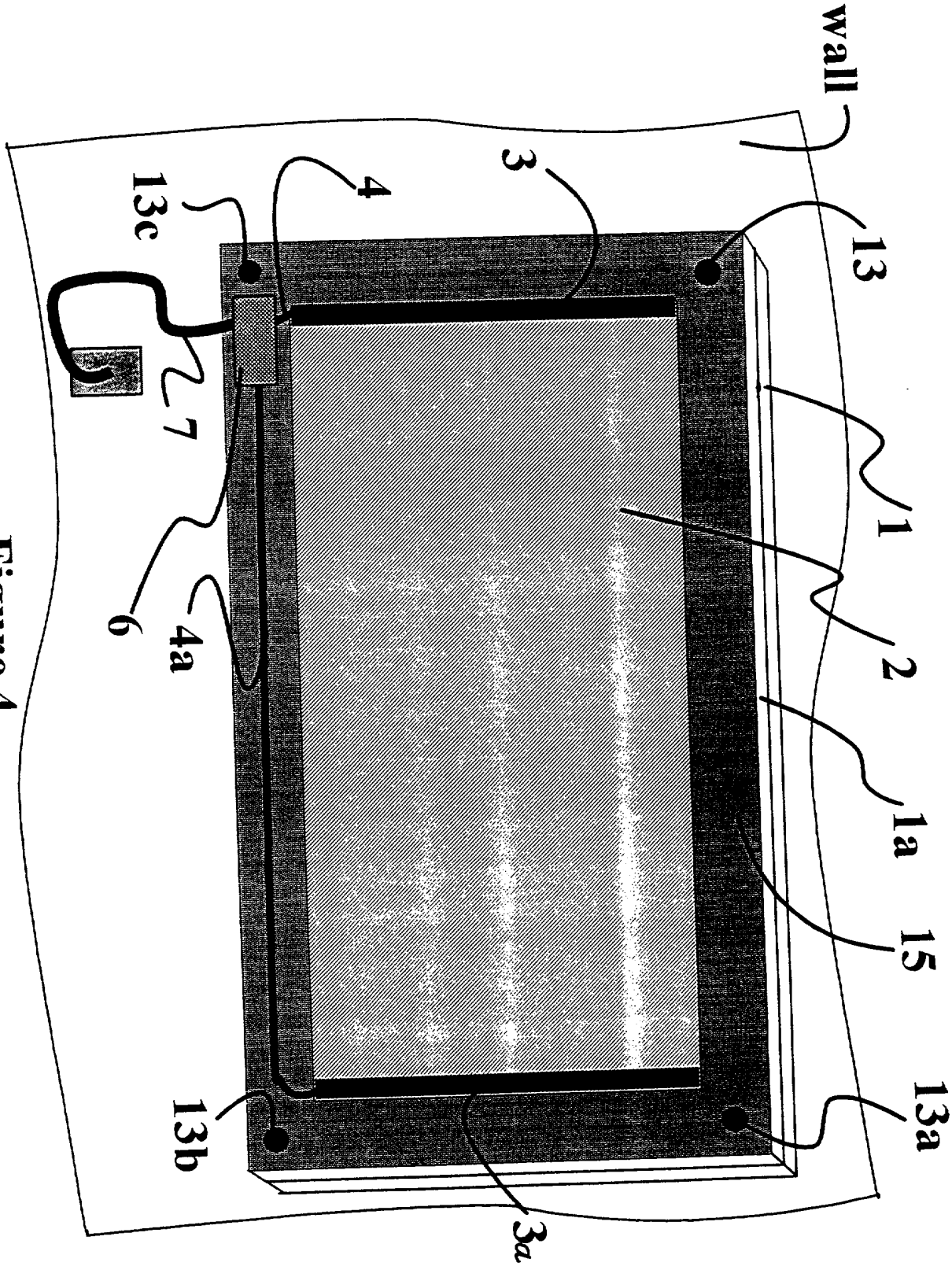

Figure 4

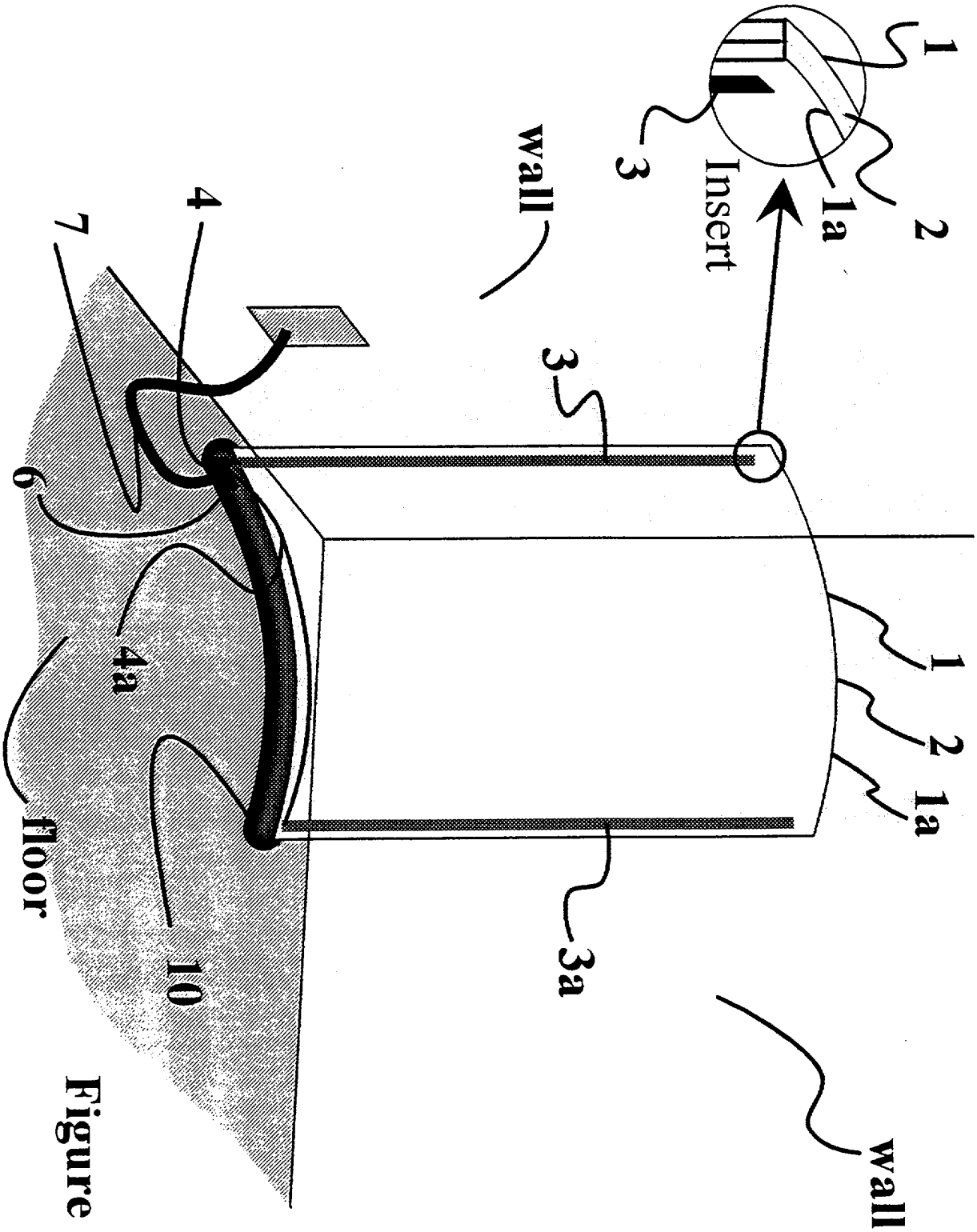

Figure 5

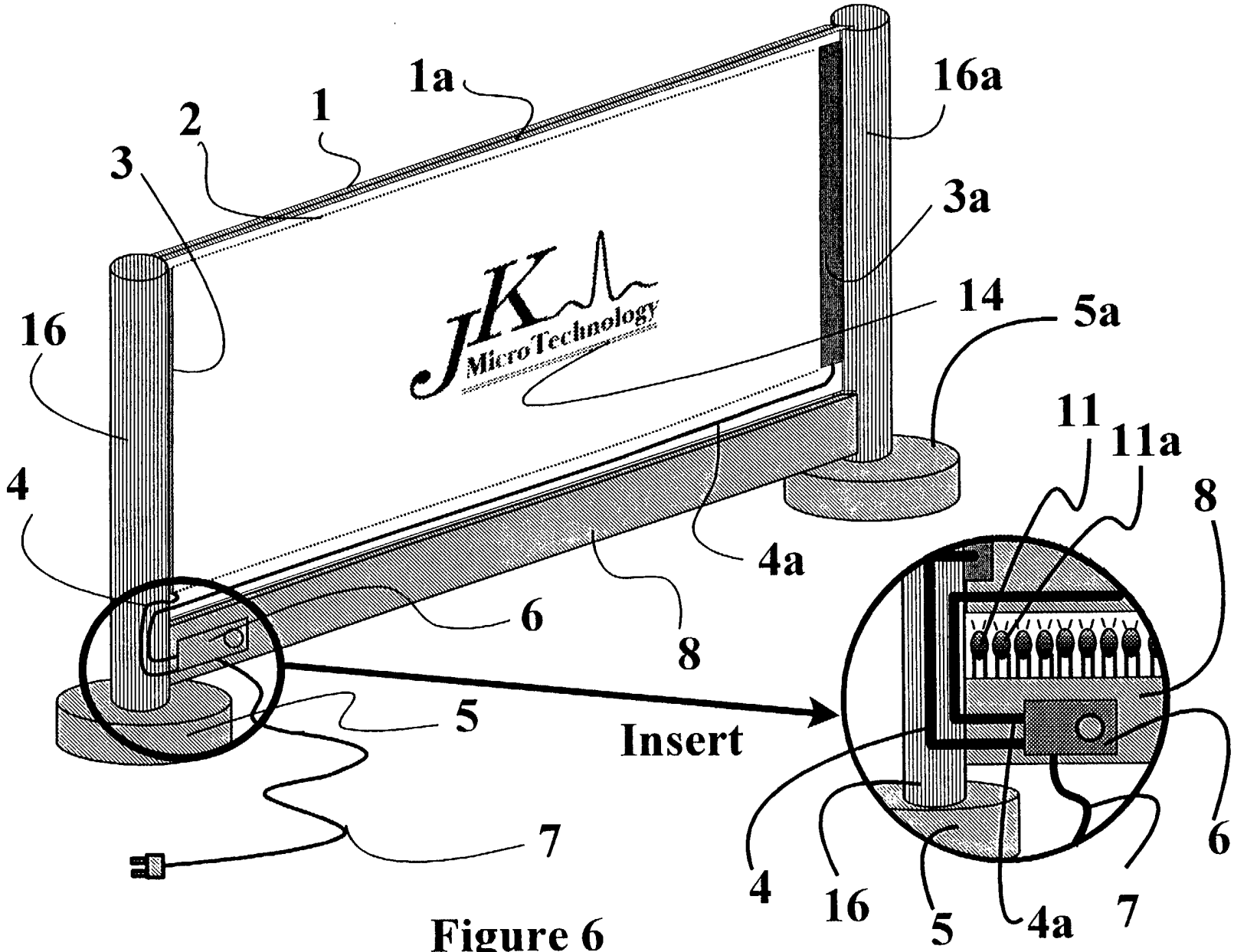
1a
1
2
3
16
4
16a
3a
14
5a
JK
MicroTechnology
11
11a
8
4a
6
8
5
Insert
7
4
16
5
4a
7
6

Figure 6

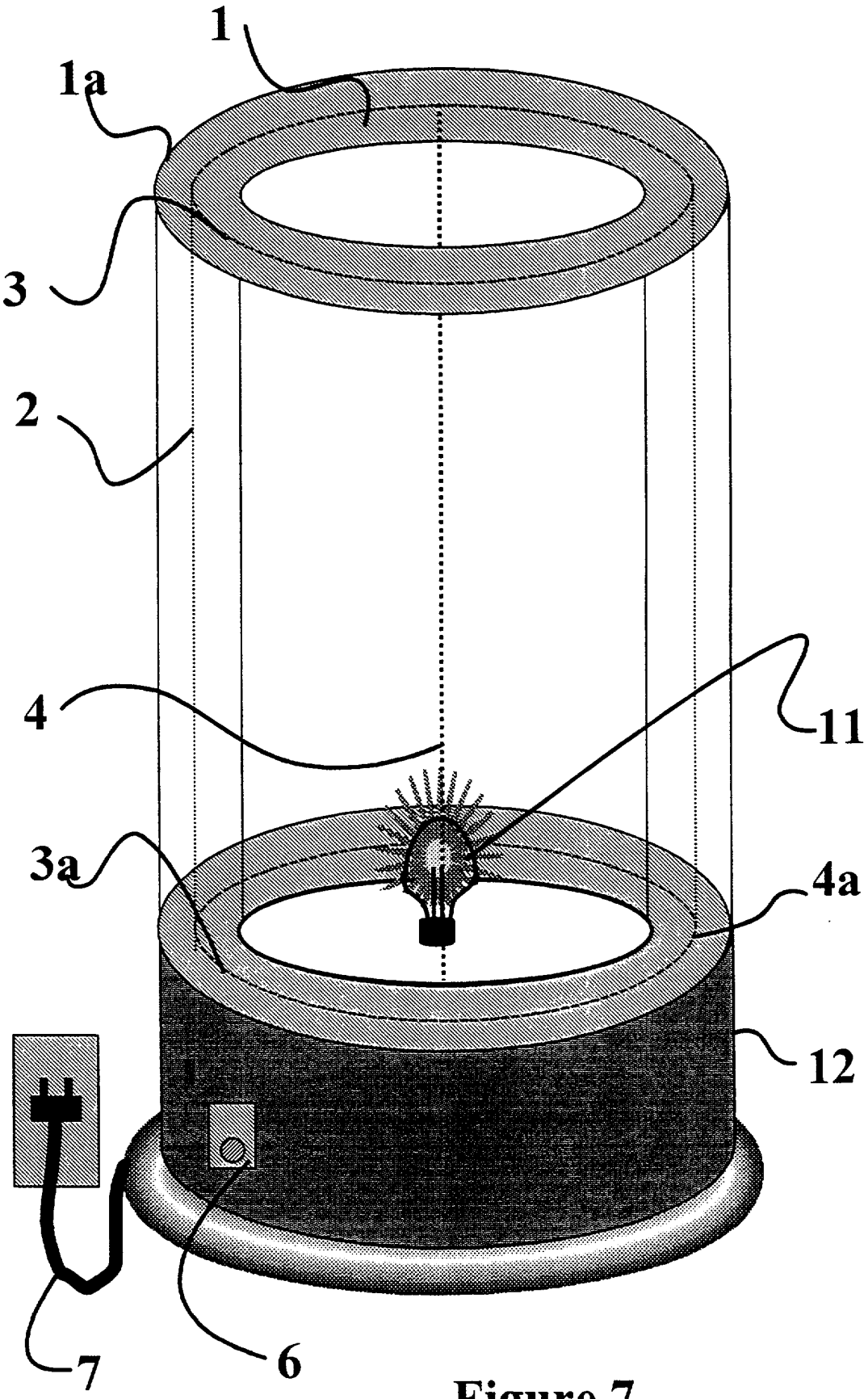

Figure 7

Transparent Electric Convection Heater

This invention relates to an electrically heated optically transparent convection heater for use as a space heater.

Space heaters in the form of electrically heated radiators and convection heaters are well known and find application in the domestic environment as well as in offices, shops and the like.

Existing electrically heated radiators are predominately of the oil filled variety and typically consist of a hollow metal fin filled with oil attached to a tube containing a heating element. When an electrical current is passed through the heating element it is heated according to the Joule effect and subsequently heats the oil in the fin. Convection currents within the oil then cause the oil to move within the fin distributing the heat throughout the fin. Existing electrically heated convection heaters typically consists of a metallic-wire heating-element suspended within an otherwise hollow metal case. The top and bottom of the case are open to the air so that air has a free passage through the case and over the element. When an electrical current is passed through the heating element it is heated according to the Joule effect and thence heats the surrounding air, which removes the heat to its surroundings by convection. Such examples of the prior art are opaque and consequentially have diminished aesthetic appeal.

An object of the present invention is to provide an optically transparent electrically heated convection heater for use as a space heater in homes, offices, shops and the like, comprising a transparent layer made of glass, temperature-resistant transparent rigid or flexible plastic or the like which has been coated on one or on both sides with an optically transparent electrically conductive material, for example but not limited to, Indium-Tin-Oxide.

A second object of the present invention is to provide a space heater in the form of an optically transparent, electrically heated convection heater with increased aesthetic appeal over existing electrically heated opaque radiators and convection heaters.

A third object of the present invention is to provide a generic optical display platform for use as a basis for optical effects and/or displays, for use in homes, shops, offices and the like for aesthetic, entertainment, promotional, advertisement and similar purposes.

According to the present invention there is provided an optically transparent electrically heated convection heater for use as a space heater in homes, offices, shops and the like.

The essence of the present invention is a heating element made from an optically transparent, electrically conductive material, for example but not limited to, Indium-Tin-Oxide. The optically transparent, electrically conductive material is formed upon one or both sides of a transparent substrate such as glass, temperature-resistant transparent rigid or flexible plastic or the like and is heated according to the Joule effect by the passage of an electrical current. The substrate carrying the optically transparent, electrically conductive material is then formed into

a convection heater suitable for use in homes, offices, shops and the like by attachment to a further sheet or sheets of glass, temperature-resistant transparent rigid or flexible plastic or the like and/or a suitable supporting structure and/or mounting.

According to the second aspect of the present invention there is provided an optically transparent electrically heated convection heater made of glass, temperature-resistant transparent rigid or flexible plastic or the like with provision for either wall or floor mounting which may be illuminated with coloured lamps, light-emitting diodes and the like to provide optical effects and/or displays, for use in homes, shops, offices and the like for aesthetic, entertainment, promotional, advertisement and similar purposes.

According to the third aspect of the present invention there is provided an optically transparent electrically heated convection heater made of glass, temperature-resistant transparent rigid or flexible plastic or the like with provision for either wall or floor mounting which may be decorated with pictures, company logos, trade marks, coats of arms, other graphic designs and the like to provide optical effects and/or displays, for use in homes, shops, offices and the like for aesthetic, entertainment, promotional, advertisement and similar purposes.

In the preferred embodiments of the present invention the present invention will be operated by connection to the mains electricity supply. As this may present a potential safety hazard in the preferred embodiments access to the heating element or elements, the mains wiring and all electrodes electrically connected to the mains wiring will be restricted. This can be achieved by one or more of the following non-restrictive exemplary methods: attaching the transparent conductive layer complete with its substrate to a sheet of glass or temperature-resistant transparent plastic or the like such that the transparent conductive layer is sandwiched between its substrate and the glass or temperature-resistant transparent plastic or the like, where the substrate can be glass, temperature-resistant transparent plastic or the like; sandwiching the transparent conductive layer complete with its substrate between a layer of glass or temperature-resistant transparent plastic or the like and another layer of glass or temperature-resistant transparent plastic or the like; providing a margin around the edge of the sheet of glass, transparent plastic or the like which is free of the transparent conductive layer; bonding of the glass and or temperature-resistant transparent plastic or the like sheet or sheets to each other so as to preclude access to the transparent conductive layer; placing of the sheet of glass, transparent plastic or the like coated with the transparent conductive layer upon or adjacent to an electrically insulating surface such that access to the transparent conductive layer is restricted; or any combination of the above thereof.

The power dissipated by a single electrically conductive layer, for example a transparent conductive layer, may be formulated in accordance with Equation 1 as follows:

$$P = \frac{V^2}{R_{sh}} \frac{H}{L} \tag{1}$$

where P is the power dissipated in the film;
V is the supply voltage;
R_{sh} is the sheet resistance of the film in Ω/square;

H is the height of the film as defined in Figure 1;
L is the length of the film as defined in Figure 1.

Equation 1 can be transposed and used to calculate the sheet resistance of the transparent conductive layer required for any given power-supply voltage and dimensions of the said layer.

For example, a transparent conductive film designed to dissipate 1kW of dimensions $H = 0.5$m and $L = 1$m, connected to an electricity supply with V=240V, would have $R_{sh} = 28\Omega$/square. Such a sheet resistance is well within the bounds of sheet resistivities that can be obtained by such processes as DC sputtering, DC magnetron sputtering, RF sputtering, RF magnetron sputtering, evaporation, spray coating, dipping and the like; for indium-tin-oxide films and other transparent conductive films and any of the aforementioned processes or others can be used to apply the transparent conductive film to the substrate layer.

In practicing the present invention the power dissipation per square metre of surface area (the power dissipation density) of the convection heater will be adjusted such that the ultimate surface temperature of the convection heater will be in the approximate temperature range 50°C to 100°C with a preferred temperature of typically, though not exclusively, 70°C. Operating the convection heater in the above temperature range ensures that a significant proportion of the heat is removed from the convection heater by convection rather than by radiation. The surface temperature of the convection heater will be a function of the thermal conductivity of the material from which the panels that constitute the body of the convection heater are made and consequently the said surface temperature will be dependent on the material from which the said panels are made. The preferred power dissipation density is approximately, though not limited to, 1kWm^{-2}.

Figure 1 is a schematic perspective view of a transparent substrate coated with a transparent electrically conductive layer.

Figure 2 is a perspective view of the first preferred embodiment of the convection heater.

Figure 3 is a perspective view of the second preferred embodiment of the convection heater.

Figure 4 is a perspective view of the third and fourth preferred embodiments of the convection heater.

Figure 5 is a perspective view of the fifth preferred embodiment of the convection heater.

Figure 6 is a perspective view of a composite of the sixth and seventh preferred embodiments of the convection heater.

Figure 7 is a perspective view of the eighth preferred embodiment of the convection heater.

A first embodiment of the present invention will now be described by way of a non-restrictive example with reference to Figure 2. Layer 1, made of glass or of a temperature-resistant

transparent plastic or the like, is coated with transparent conductive layer, for example but not limited to indium-tin-oxide, on one side only leaving a margin around the edge of the layer 1 uncoated. The margin is of sufficient width to allow the layers 1 and 1a to be bonded together and prevent the transparent conductive layer 2 from being accessed from the edge. Electrodes 3 and 3a made from a metallic material such as, but not limited to, copper, tin, gold or the like are placed upon opposite edges of the transparent conductive layer so that they make a low resistance electrical contact to the transparent conductive layer. Layer 1a, of the same dimensions as layer 1, is left uncoated. Layer 1a is assembled adjacent to layer 1 such that the transparent conductive layer 2 on layer 1 is sandwiched between layers 1 and 1a. Electrical wires 4 and 4a make contact with the electrodes 3 and 3a to allow an electrical current to pass into and out of the transparent conductive layer. An electrical current is passed through the film, which heats it according to the Joule effect, and the power dissipated by the film is formulated by Equation 1.

A second embodiment of the present invention will now be described by way of a non-restrictive example with reference to Figure 3. The second embodiment consists of the convection heater of the first embodiment described above and with reference to Figure 2 with electrical wires 4 and 4a connected to electrical flex 7 via thermostat 6 mounted on the side of the convection heater. Layers 1, 1a and 2 are held in a vertical attitude by supports 16 and 16a mounted on feet 5 and 5a, which are separated by base 8.

It is entirely possible that two or more of the individual convectors described above could be mounted adjacent to each other and separated by a small gap upon a single stand or arrangement of feet to form a multi-element convection heater of correspondingly higher heat output.

A third embodiment of the present invention will now be described by way of a non-restrictive example with reference to Figure 4. The third embodiment consists of the convection heater of the first embodiment described above and with reference to Figure 2 with electrical wires 4 and 4a connected to electrical flex 7 via thermostat 6. Layers 1, 1a and 2 are surrounded by frame 15, which has holes 13,13a etc. formed on axes perpendicular to the plane of the layers 1, 1a and 2. By means of fixings passed through the said holes the said frame and the said layers can be affixed upon a wall or similar structure.

A fourth embodiment of the present invention will now be described by way of a non-restrictive example with reference to Figure 4. The third embodiment consists of the convection heater of the first embodiment described above and with reference to Figure 2 with electrical wires 4 and 4a connected to electrical flex 7 via thermostat 6. Layer 1 is coated on its outer surface with a reflective material (not shown), such as but not limited to chromium, such that the completed convection heater also serves as a mirror. Layers 1, 1a and 2 are surrounded by frame 15, which has holes 13,13a etc. formed on axes perpendicular to the plane of the layers 1, 1a and 2. By means of fixings passed through the said holes the said frame and the said layers can be affixed upon a wall or similar structure.

A fifth embodiment of the present invention will now be described by way of a non-restrictive example with reference to Figure 5. The fifth embodiment consists of the convection heater of

the first embodiment described above and with reference to Figure 2 with electrical wires 4 and 4a connected to electrical flex 7 via thermostat 6. In this embodiment layer 1a is formed into a curve in a single plane to enable the convection heater to stand conveniently in the corner of a room. The transparent conductive layer 2 is formed upon a flexible temperature-resistant transparent plastic or the like substrate layer 1 and brought into proximity with the curved layer 1a such that the transparent conductive layer 2 is sandwiched between its substrate layer 1 and layer 1a. Layers 1 and 1a, are mounted on base 10. The insert in Figure 5 shows detail of the corner of the convection heater.

A sixth embodiment of the present invention will now be described by way of a non-restrictive example with reference to Figure 6. The sixth embodiment consists of the convection heater of the first embodiment described above and with reference to Figure 2 with electrical wires 4 and 4a connected to electrical flex 7 via thermostat 6. Layers 1, 1a and 2 are held in a vertical attitude by supports 16 and 16a mounted on feet 5 and 5a, which are separated by base 8. It is provided for the illumination of the transparent layers 1, 1a and 2 by the inclusion of luminaries 11, 11a etc. mounted in base 8. Luminaries 11, 11a etc. may take the form of, though not exclusively, incandescent lamps, fluorescent lamps, light-emitting diodes and the like. The insert in Figure 6 shows detail of a non-restrictive example of said luminaries.

A seventh embodiment of the present invention will now be described by way of a non-restrictive example with reference to Figure 6. The seventh embodiment consists of the convection heater of the first embodiment described above and with reference to Figure 2 with electrical wires 4 and 4a connected to electrical flex 7 via thermostat 6. Layers 1, 1a and 2 are held in a vertical attitude by supports 16 and 16a mounted on feet 5 and 5a, which are separated by base 8. A graphic design or designs 14 is/are formed, deposited, etched or otherwise created upon the surface of one or both of the layers 1 and 1a.

An eighth embodiment of the present invention will now be described by way of a non-restrictive example with reference to Figure 7. The eighth embodiment consists of the convection heater of the first embodiment described above and with reference to Figure 2 with electrical wires 4 and 4a connected to electrical flex 7 via thermostat 6. Layer 1a is formed in the shape of a cylinder. The transparent conductive layer 2 is formed upon a flexible temperature-resistant transparent plastic or the like substrate 1 and applied to the inside of the cylindrical layer 1a such that the transparent conductive layer 2 is sandwiched between its substrate 1 and cylindrical layer 1a. Cylindrical layer 1a is mounted on base 12 which contains lamp or lamps 11, 11a etc. (only lamp 11 is shown) or other suitable luminaries. In this embodiment the present invention may be operated with the heater switched off (switch not shown) and the lamp or lamps 11, 11a etc. illuminated and function as a lamp.

Obviously, many modifications and variations of the present invention are possible now that the present invention has been disclosed. Therefore, it is to be understood that within the scope of the appended claims the invention may be practiced otherwise than as specifically described above.

Claims

1. An optically transparent electrically heated convection heater for use as a space heater in homes, offices, shops and the like. Comprising a transparent layer made of glass, temperature-resistant transparent flexible or rigid plastic or the like which has been coated on one or on both sides with an optically transparent electrically conductive material, for example but not limited to, Indium-Tin-Oxide.

2. An optically transparent electrically heated convection heater according to Claim 1 wherein the optically transparent electrically conductive material is sandwiched between a transparent layer made of glass, temperature-resistant flexible or rigid transparent plastic or the like and another transparent layer made of glass, temperature-resistant transparent flexible or rigid plastic or the like.

3. An optically transparent electrically heated convection heater according to Claim 2 wherein a margin is provided around the edge or edges of the sheet or sheets of glass, transparent flexible or rigid plastic or the like which is free of the transparent conductive layer and the bonding of the glass and/or temperature-resistant flexible or rigid transparent plastic or the like sheet or sheets to each other so as to preclude access to the transparent conductive layer from the outside.

4. An optically transparent electrically heated convection heater according to any of Claims 1-3 wherein the sheet or sheets of glass, transparent flexible or rigid plastic or the like are supported and/or mounted upon a base, feet or similar structure in any attitude.

5. An optically transparent electrically heated convection heater according to any of Claims 1-3 wherein the sheet or sheets of glass, transparent flexible or rigid plastic or the like have holes on axes perpendicular to the plane of the sheet or sheets of glass, transparent flexible or rigid plastic or the like such that the said convection heater can be affixed to a wall or similar structure.

6. An optically transparent electrically heated convection heater according to any of Claims 1-3 wherein the sheet or sheets of glass, transparent flexible or rigid plastic or the like is surrounded by a frame such that the said convection heater can be affixed to a wall or similar structure.

7. An optically transparent electrically heated convection heater according to any of Claims 1-3 wherein one surface of the sheet or sheets of glass, transparent flexible or rigid plastic or the like is coated with a reflective material, such as but not limited to chromium, such that the said convection heater can function as a mirror.

8. An optically transparent electrically heated convection heater according to any of Claims 1-3 wherein the body of the said convection heater is curved in a single plane such that the said convection heater would stand conveniently in the corner of a room.

9. An optically transparent electrically heated convection heater according to any of Claims 1-3 wherein the body of the said convection heater is formed into a cylinder

10. An optically transparent electrically heated convection heater according to any of the Claims 1-9 wherein it is provided a means for the illumination of the transparent layers 1, 1a and 2 by the inclusion of luminaries 11, 11a etc. Luminaries 11, 11a etc. may take the form of, though not exclusively, incandescent lamps, fluorescent lamps, light-emitting diodes and the like.

11. An optically transparent electrically heated convection heater according to any of Claims 1-10 wherein a graphic design or designs is/are formed, deposited, etched or otherwise created upon the surface of one or both of the layers 1 and/or 1a for the purpose of aesthetic enhancement, entertainment, promotional, advertisement and/or similar purposes.

12. An optically transparent electrically heated convection heater substantially as described herein with reference to Figures 1-7 of the accompanying drawing.

The Patent Office

INVESTOR IN PEOPLE

Application No: GB 0010519.7 **Examiner:** T P Marlow
Claims searched: 1 to 12 **Date of search:** 8 September 2000

Patents Act 1977
Search Report under Section 17

Databases searched:

UK Patent Office collections, including GB, EP, WO & US patent specifications, in:

UK Cl (Ed.R): F4S: (S60A) (S60B) (S60C)

Int Cl (Ed.7): F24C: 7/04 F24H: 3/00, 3/04 H05B: 3/84

Other: ONLINE: WPI, EPODOC, JAPIO

Documents considered to be relevant:

Category	Identity of document and relevant passage		Relevant to claims
A	EP 0582457 A2	MITSUI - see transparent substrate (2), transparent conducting film (3) and thin substantially light transmitting layer (4); example 10 (in column 14) uses indium tin oxide for film (3)	
X, Y	WO 96/27271 A1	COGIDEV - see convector heater mounted into wall in Figs. 1 and 2 having transparent panels (4,5,6) with transparent thin conducting heating layer (5a) emitting heat by Joule effect; line 1 of page 9 states heating layer (5a) may be indium tin oxide; page 5 lines 24 to 26 mentions decorative colour and light effects on the panels	X:1-6,8, 9,10,11 Y:7
X	JP 630156934	MATSUSHITA SEIKO - see abstract showing space heater with transparent glass sheet (1), transparent tin oxide film (2) acting as heating element in Fig. 1	1,2,4 -6,8,9
A	US 5354966	SPERBECK - see indium tin oxide layer (17) in figures acting as heating element in window defogging system	

X	Document indicating lack of novelty or inventive step	A	Document indicating technological background and/or state of the art.
Y	Document indicating lack of inventive step if combined with one or more other documents of same category.	P	Document published on or after the declared priority date but before the filing date of this invention.
&	Member of the same patent family	E	Patent document published on or after, but with priority date earlier than, the filing date of this application.

The Patent Office

INVESTOR IN PEOPLE

Application No: GB 0010519.7 **Examiner:** T P Marlow
Claims searched: 1 to 12 **Date of search:** 8 September 2000

Category	Identity of document and relevant passage		Relevant to claims
Y	US 4352006	ZEGA - see coating layers (11,12,13) including conducting layer (13) on glass substrate (1) in Fig. 1 forming heated mirror	7

X	Document indicating lack of novelty or inventive step	A	Document indicating technological background and/or state of the art.
Y	Document indicating lack of inventive step if combined with one or more other documents of same category.	P	Document published on or after the declared priority date but before the filing date of this invention.
&	Member of the same patent family	E	Patent document published on or after, but with priority date earlier than, the filing date of this application.