DEPT REPORT No. 9538

A PROPOSAL FOR THE REFURBISHMENT OF THE HATFIELD SIX-COMPONENT, WEIGH-BEAM BALANCE.

C. Goodchild, June 1994

PROPOSAL CONTENTS LIST

PART I

THE BALANCE REFURBISHMENT TECHNICAL PROPOSAL

1. Introduction

This proposal addresses the requirement to re-commission the six-component, force-balance mechanism for the "9'x7' Hatfield" wind-tunnel. The performance of the six-component balance is critical to commercial viability of the wind-tunnel in two respects. First, the accuracy of measuring the position of the calibrated weight that balances the force applied to a wind-tunnel model must, at least, meet expectations professional standards. A professional standard of measuring accuracy is essential if the wind-tunnel service is to be marketed for serious commercial work. Second, the cost of the wind-tunnel service is based on the speed at which work can be progressed through the facility. This issue is, in part, addressed by the plan to use interchanging working sections. The other critical factor that influences the throughput of the facility is the measurement-cycle. That is time between measurement points during which the tunnel flow and balance mechanisms adjust to changes in applied forces. This proposal presents a plan to refurbish the six-component balance and address the issues of instrument accuracy and the speed at which measurements are taken during multiple data-point tests.

1.1 The Balance Mechanism

The balance mechanism has a classical platform arrangement where the forces on a model mounted in the wind-tunnel's working section are transferred by three struts to the force counter-balance apparatus situated below the tunnel floor. The combination of forces applied to the three struts is resolved into six-components of force; three rotational forces or moments and three translation forces. The load range and accuracy for each of the six components are listed table 1.

Table 1: Load range and accuracy

Component	Load range		Accuracy	
Roll moment	1400 lb-ft	1898 Nm	0.2 lb-ft	0.284 Nm
Pitch moment	1200 lb-ft	1627 Nm	0.1 lb-ft	0.135 Nm
Yaw moment	1000 lb-ft	1356 Nm	0.25 lb-ft	0.339 Nm
Lift force	1400 lb	6227 N	0.1 lb	0.444 N
Drag force	480 lb	2135 N	0.01 lb	0.044 N
Side force	800 lb	3558 N	0.1 lb	0.444 N

Each component of force on the wind-tunnel model is measured by a counter-balance method that uses a calibrated weight on a fulcrum weigh-beam balance. The counter-balance is a two-stage mechanism that gives a coarse and fine adjustment arrangement. Coarse adjustment of the counter-balance is effected by adding, or removing drop- or pan-weights from a link that is attached to the end of the balance-arm. The fine adjustment counter-balance is produced by moving a jockey or poise-weight that slides along the balance-arm. Force measurements are made when the balance has settled to

the equilibrium state. The equilibrium state is detected when the balance-arm is positioned horizontally. A block diagram of the six-component apparatus is shown in figure 1 and a diagram of an instrumented single weigh-beam assembly is shown in figure 2.

1.2 The Balance Servomechanisms

The application of balancing forces is controlled through servomechanisms on each balance-arm. For each arm, the servomechanism automatically applies or removes the pan weights for the coarse force-balance adjustment. Fine balance is achieved by moving the position of the poise weight on the counter balance-arm. An inductive differential displacement transducer detects the tilt of the balance-arm. When the arm is displaced from horizontal, actuators adjust the position of the counter-balance pan and poise weights to cause the arm to stabilise in horizontal equilibrium. The dynamical response of a balance-arm is regulated by an oil-filled dash-pot. This device provides passive damping through a mechanical link which attaches it to the balance-arms.

1.2.1 Dynamical Response

The dynamical response is the key feature to achieve stability in the complete balance when measuring complex, cross-coupled, multiple-component forces. The cross coupling that exists between the components arises from two sources. The first source is implicit in the design of the balance. As indicated above, the six-force components are resolved

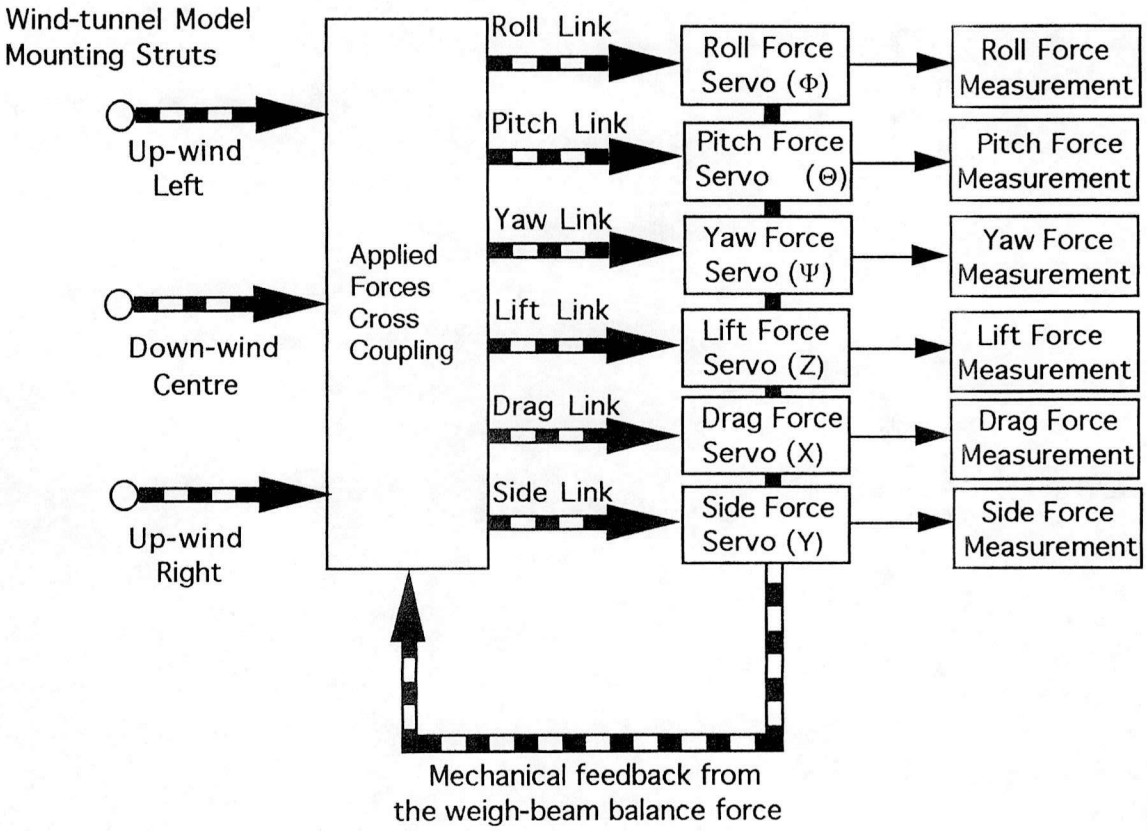

Figure 1: The six-component balance block diagram

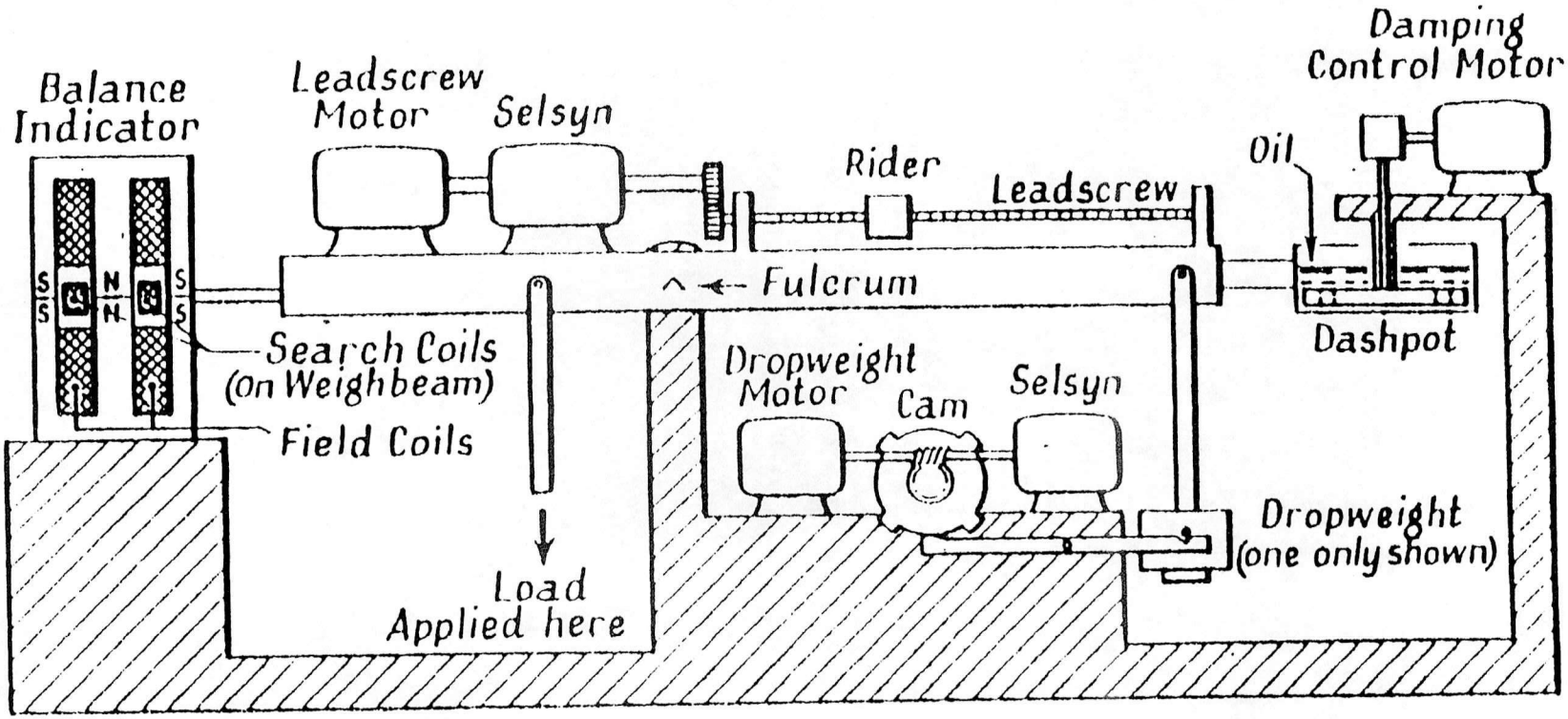

Figure 2: The Hatfield instrumentation of a single weigh-beam balance.

1.3.1 Economic Motivation

In most research and development work, the combinations of measurement configurations are counted in thousands. This means the time it takes to make a measurement after moving a wind-tunnel model from one test configuration to another configuration is an important factor in overall efficiency of the wind-tunnel service. The measurement cycle comprises the tunnel flow-settling time, the balance settling time and the data acquisition time. The tunnel settling time is determined by the wind-flow and the size of model and will typically be between one and ten seconds. With modern automatic data-logging instruments the time to collect and record data is measured in microseconds so the balance settling-time dominates the time-in-tunnel test schedule. This means that the efficiency gain resulting from a reduction in the settling-time of the balance corresponds directly to the cost of a wind-tunnel test.

2.1 The Proposed Refurbishment

It is proposed to replace the obsolete servomechanism with a system based on current technology. In making this change it will be possible to address the issue of improving the dynamical response settling-time. The proposed improvement will be achieved in two ways. First, the passive oil-filled dash-pot dampers will be replaced by an active tilt-pivot dynamical-loader and damping system. The second scheme is to replace the coarse and fine counter-balance adjustment system with a single stage counter-balance on the slider mechanism.

2.1.1 The Slider Servomechanism

The proposed servomechanism for the beam-arm slider will have the same arrangement as the original apparatus. The obsolete components will be replaced by modern counterparts. The proposed balancing mechanism will develop all the counter-balance force from a single moving weight on the beam-arm. A precision actuation assembly, in which the minimisation of the non-linear characteristics is one of the main design objectives, will be a development of digitally controlled, null-seeking, position servomechanism, incorporating adaptive error-rate damping. To achieve this objective the counter-balance actuator will comprise a direct-current torque motor that is coupled to the sliding counter-weight through a circulating-ball lead-screw. The particular objective is to keep the balance-arm tilt-mechanism disturbance forces to a minimum, and necessarily well below the force measurement resolution.

2.1.2 Tilt-Pivot Dynamical-Loader And Active Damper

The principal challenge to improving the dynamical response settling-time depends on the cross-coupled forces. The inherent cross-coupling of the balance is predictable. However, the force cross-coupling that is produced by wind-tunnel models under test changes with the model and is therefore generally unpredictable. The purpose of the tilt-pivot dynamical-loader and active damper is to limit the out of balance tilt and allow the operation of an adaptive scheduler to sequence the counter-balance adjustment respectively. The combined effect of these two mechanisms

will achieve an optimal settling time in the complete six-component balance system. A block diagram of the proposed weigh-beam instrumentation is shown in figure 3 and figure 4 shows the instrumentation assembly on a single weigh-beam.

2.1.3 Operation Of The Tilt-Pivot Dynamical-Loader

When the forces applied to the load and counter weight balance-arms are equal, the arm is horizontal and the tilt-pivot dynamical-loader is deactivated. In this state the forces on the wind-tunnel model are estimated from the position of the counter-balance weight. Before a new load condition is applied to the wind-tunnel model, the dynamical-loader is energised into a load-cell mode. In this mode the balance arms are kept horizontal by the loader. Asymmetric forces are estimated from the current drawn by the dynamical-loader. The counter-weight slider moves in a sense to cause the dynamical-loader current to reduce to a predetermined level, around zero amperes. When this level is reached on all the six-components the dynamical-loaders are switched out and the balance arms revert to a conventional weigh-beam mode. Slider adjustments continue until the system is balance in all six-components.

2.1.4 Operation Of The Active Damper

The active-damper is a tilt-motion rate sensor. The proposed device produces an electrical signal that gives an estimate of the tilt angle rate of the balance-arm. This electrical signal will be electronically controlled to effect an adaptable damping response of a balance-arm. This feature

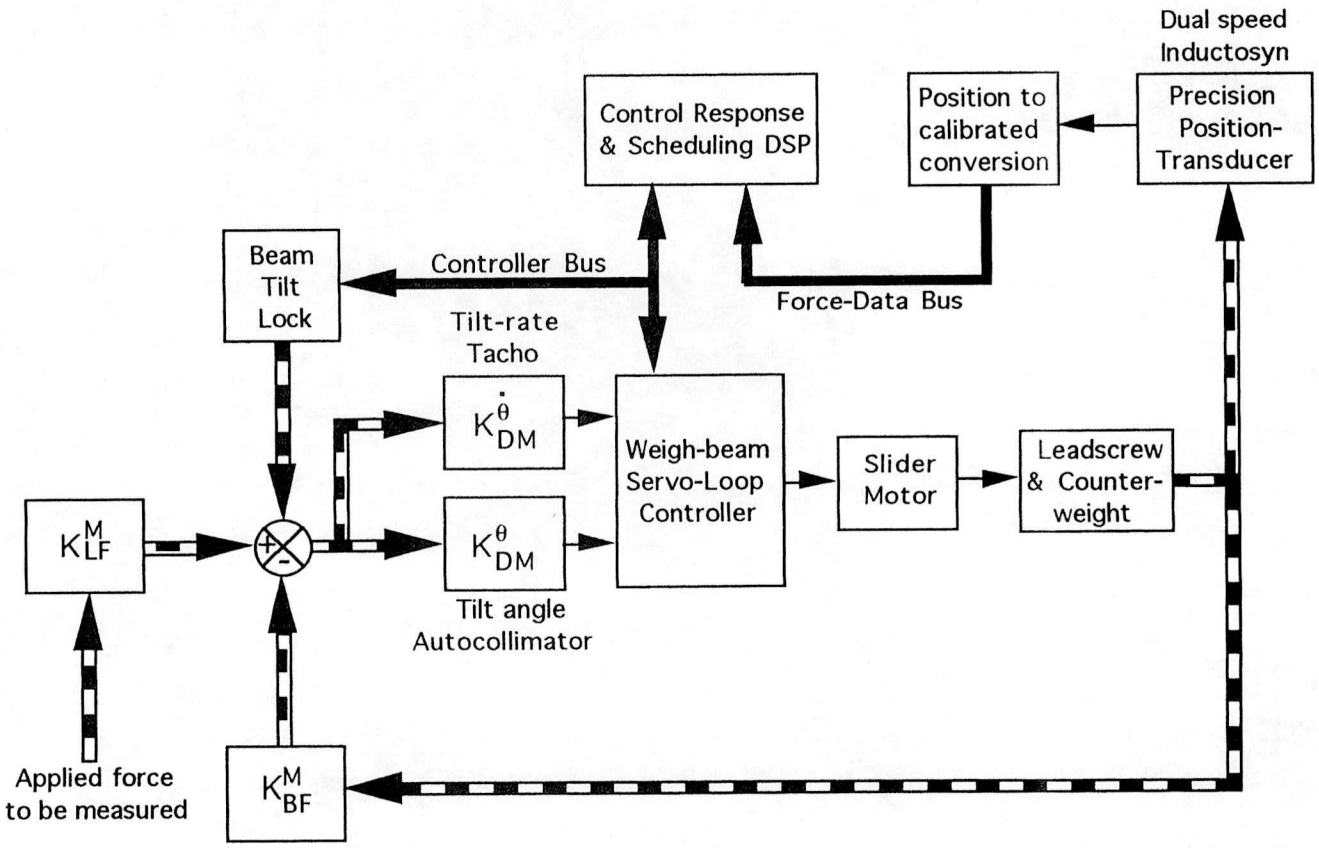

Figure 3: A block diagram of the proposed weigh-beam controller

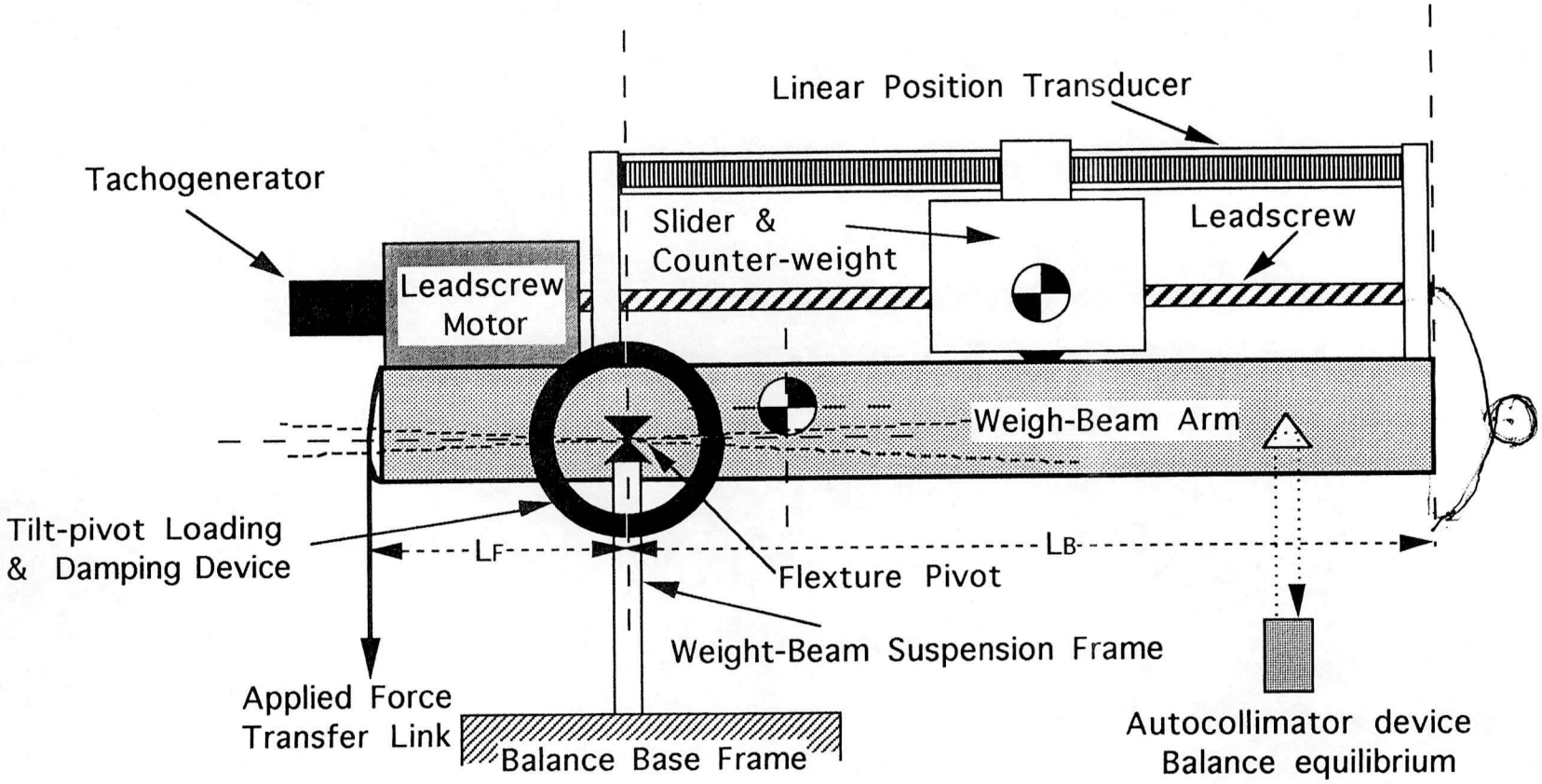

Figure 4: The proposed weigh-beam instrumentation

will permit the harmonisation of the six-component weigh-beam dynamics. By incorporating a software scheduler for adaptive damping the adjustment of the weigh-beam sliders will be sequenced in an order that will allow a minimise of the effects of force cross-coupling.

2.1.5 Controller And Programming

The dynamical performance of each balance-arm and the scheduling of the sequence to adjust the counter-balance sliders will be digitally controlled using general purpose desk-top computer as the control processor. It will necessary to produce a controller program. The controller and measurements processing programs will be written in "C".

2.1.6 Commercial Protection

The idea to incorporate a load-cell mode and with a fulcrum balance to reduce the measurement cycle time is novel. As such, the commercial protection of the proposed balance servomechanism and the controller software should be considered.

2.2 The Force Measurement System

The specification of force measurement for each of the six components is given in table 1. On the original balance these measurements were derived from a type of synchro transducer attached to the lead-screw motor. For the proposed single stage counter-balance technique the required accuracy to which the slider position must be determined is very demanding for any type of geared rotary position

transducer. A possible candidate for the slider-position measurement device is a multiple-speed, linear Inductosyn. By designing a different cycle-pitch for each track, such that the relationship between tracks is based on the "N/N+1 Cycle-Principle" the measurement will be absolute-position. Other devices will be examined for their suitability. The selection criteria will be the achievable absolute accuracy and stroke length.

2.2.1 Test-runs monitoring and data-recording will be incorporated into the desk-top computer that is used for the servomechanism controller. However, the functions of the servomechanism control will remain separated from the force-measurements' programs.

3. The Proposed Refurbishment Programme

It is proposed to initiate the work to refurbish the balance with the fabrication of a concepts-model. The model will be designed for a performance that matches the most demanding specification from the six-component system. The concepts' model will comprise two, coupled balance-arms and incorporate all the proposed servomechanism instrumentation; a diagram of the apparatus is shown in figure 5. The concepts-model will demonstrate the operation of the dynamical-loader and the adaptive active damper. A slider positioning system will be added to one of the balance-arms to develop and evaluate the counter-force measurement technique. Further to demonstrating the feasibility of the balance-arm control scheme the concepts-model will be used

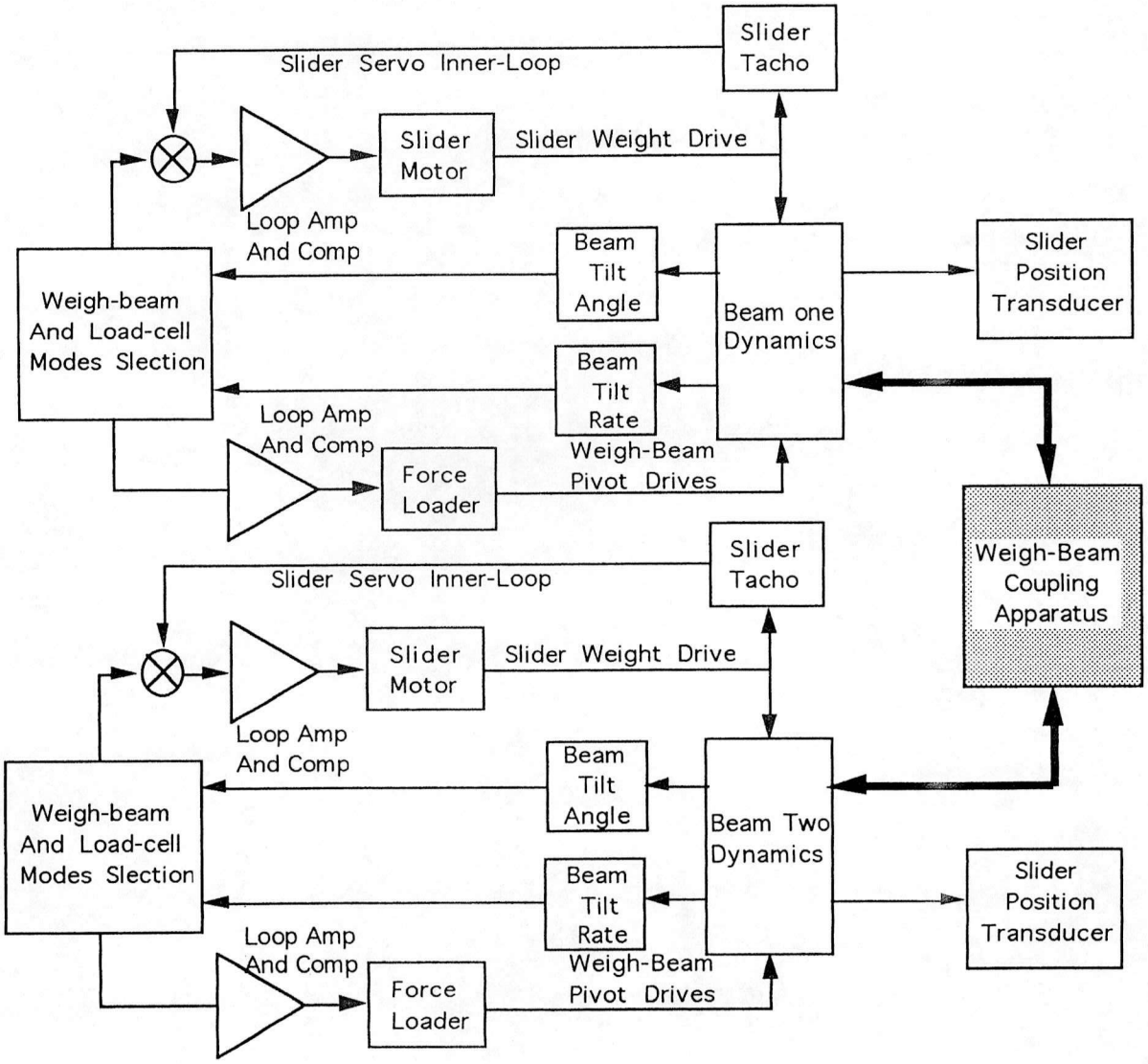

Figure 5: Proposed system for a concepts-model

to develop the controller software for the six-component balance.

4. Simulation Of The Complete Six-Component Balance

A parallel activity to the design and fabrication of the concept's model will be the development of computer simulation of the complete six-component balance. The simulation will serve the development of the proposed balance system by providing a mechanism that will exercise the controller software. Also the definitive simulation of the complete balance system will be available to create schedules for the counter-balance adjustment sequence. This facility will permit the prediction of the force-balance dynamics and hence the definition of a balancing schedule before a model is installed in the tunnel. This procedure will contribute to improvements in the tunnel's efficiency.

PART II

MANAGEMENT AND COST PROPOSAL

6 Introduction

The refurbishment plan will be carried out in a two-phase programme. This permits a minimum risk approach to the introduction of the proposed balance control. The production of a concepts model during the first phase will establish the feasibility of the damping control before it is committed to the main refurbishment programme, covered by under the phase-two programme.

6.1 Tasks Of The Refurbishment Programme

The first phase of the refurbishment programme is divided into eight tasks (tasks 1/1 to 1/8). These tasks are concerned with the design, manufacture and test of the concept's model. The phase-two programme is divided into eight tasks (tasks 2/1 to 2/8). These tasks cover the main refurbishment of the six-component balance. This two-phase approach will minimise the disturbance to six-component balance that would occur if the apparatus was used to develop the proposed balance-force servomechanisms.

6.2 Tasks For The Phase-One Programme

Task 1/1. Design and fabricate the concepts' model balance-arm that will measure forces ranging form 0-to-6227 N with an accuracy of 0.4 N.

Task 1/2. Design the servomechanism assembly and include the dynamical loader, the adaptive active-damper and counter-balance slider transducer.

Task 1/3. Design and program the servomechanism controller.

Task 1/4. Integrate and test the balance-arm assembly with the servomechanism instruments and controller software.

Task 1/5. Design, tests and calibrate the slider position-measurement device and data conversion system.

Task 1/6. Develop the refurbishment-engineering plan for six-component assembly.

Task 1/7. Develop a plan for a comprehensive test and calibration (T&C) programme.

Task 1/8. Carry out a comprehensive engineering survey of the six-component balance. Produce dimensioned diagrams of each balance-arm assembly and the linkages that connect the balance-arms to the wind-tunnel model mounting struts.

6.3 Tasks For The Phase-Two Programme

Task 2/1 Design and program the six-component controller and slider-position software.

Task 2/2 Identify and remove unnecessary wiring and components, from the balance assembly. Check, clean and align the balance linkages.

Task 2/3 Design and make the modification to the balance-arms to accommodate the new servomechanism.

Task 2/4 Assemble and wire the servomechanisms on the balance-arms.

Task 2/5 Integrate the servomechanisms with the controller software.

Task 2/6 Test the balance-arm servomechanisms for functional operation, and the stability of the six-component integrated software and hardware assembly (according to the T&C plan).

Task 2/7 Integrate, test and calibrate the force measurement transducers and the slider- position to force measurement software.

Task 2/8 Conduct the user acceptance tests and provide training for the operators.

6.4 The Work Programme.

The phase-one programme is organised as a six-month activity. The design and manufacture of the dual, coupled balance apparatus for the development of the concepts' model will require 20 weeks of engineering effort and 15 weeks of technician support. The technician support is divided between 10 weeks of mechanical and 5 weeks electrical. The phase-two programme is organised to start on completion of phase-one. Phase-two is also scheduled to be completed in 26 weeks. The estimated engineering effort during phase-two is 15 weeks with a further 30 weeks of technician and technical programmer activity. The activity time table for both phases is shown in figure 6.

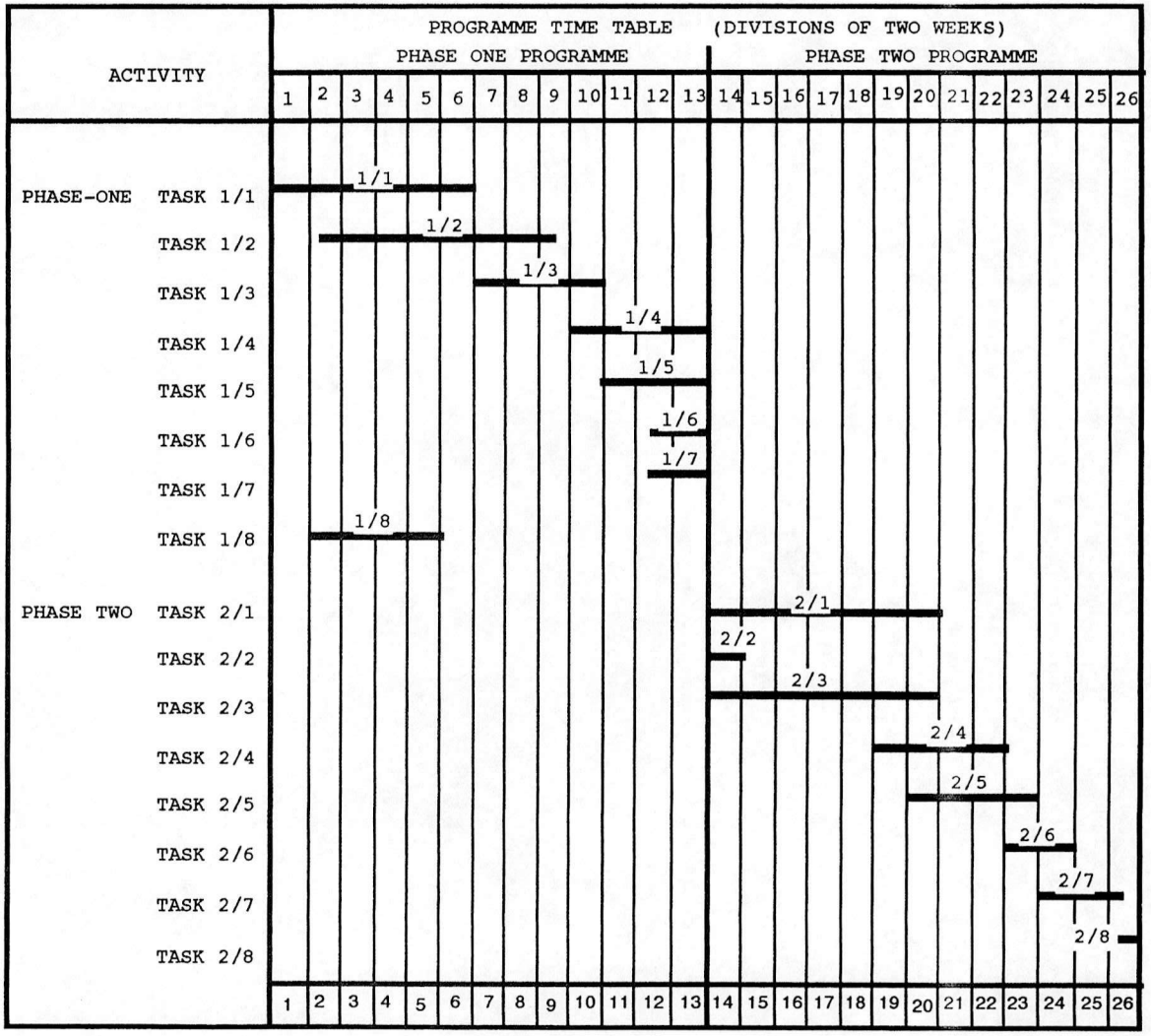

Figure 6: Time scales for both stages of refurbisment

7 Cost Estimates

The engineering cost price for phase-one are as follows:

Engineering design	£10000
Technician support	£ 3750
Controller	£ 5000
Components	£ 5000
Materials	£ 1500
Phase-one sub-total	£25250

The engineering budgetary cost price for phase-two are as follows:

Engineering design	£ 7500
Technician support	£ 7500
Components	£25000
Materials	£ 3000
Phase-two sub-total	£43000

Balance refurbishment cost £68250 Ex O/H & VAT